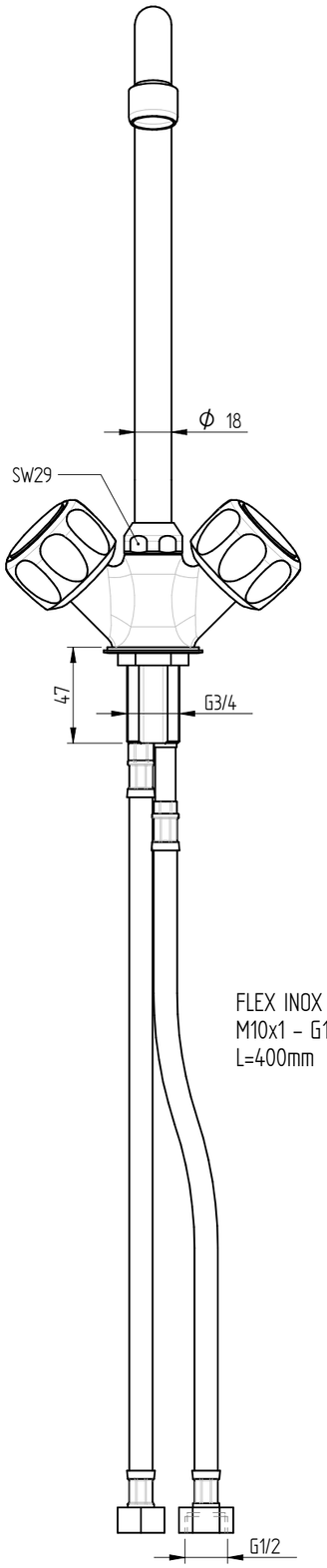

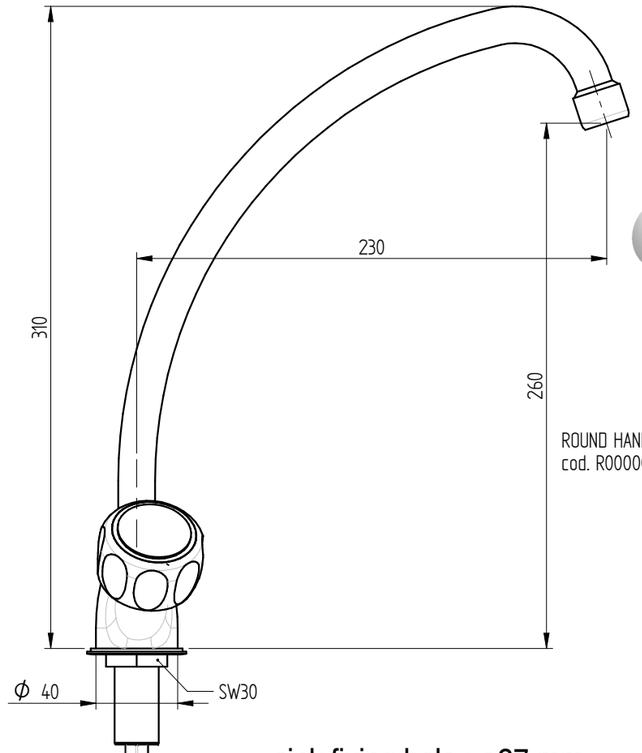

sink fixing hole : ø27 mm

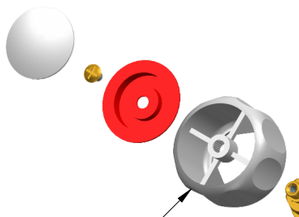

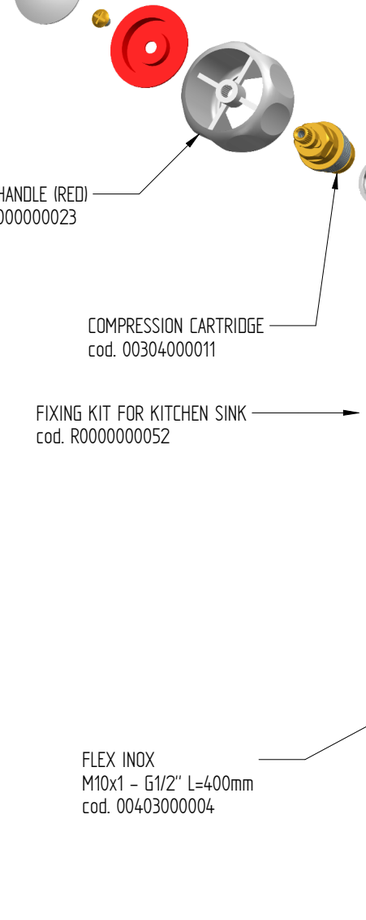

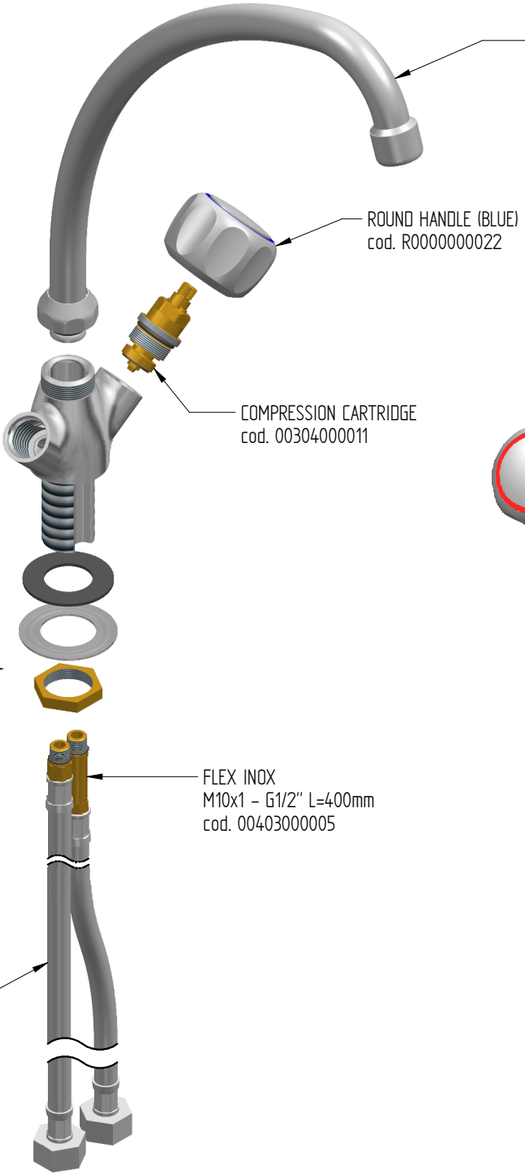

Rev. 00