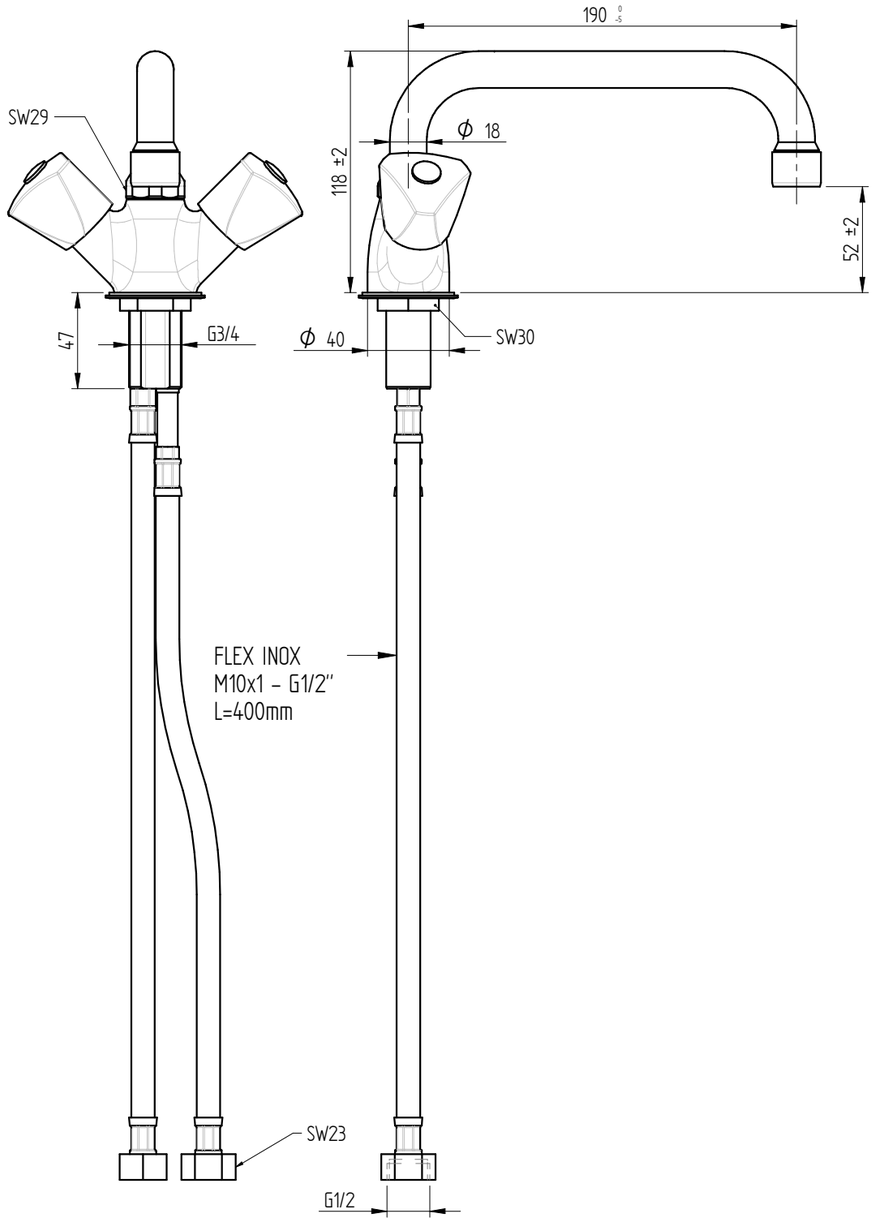

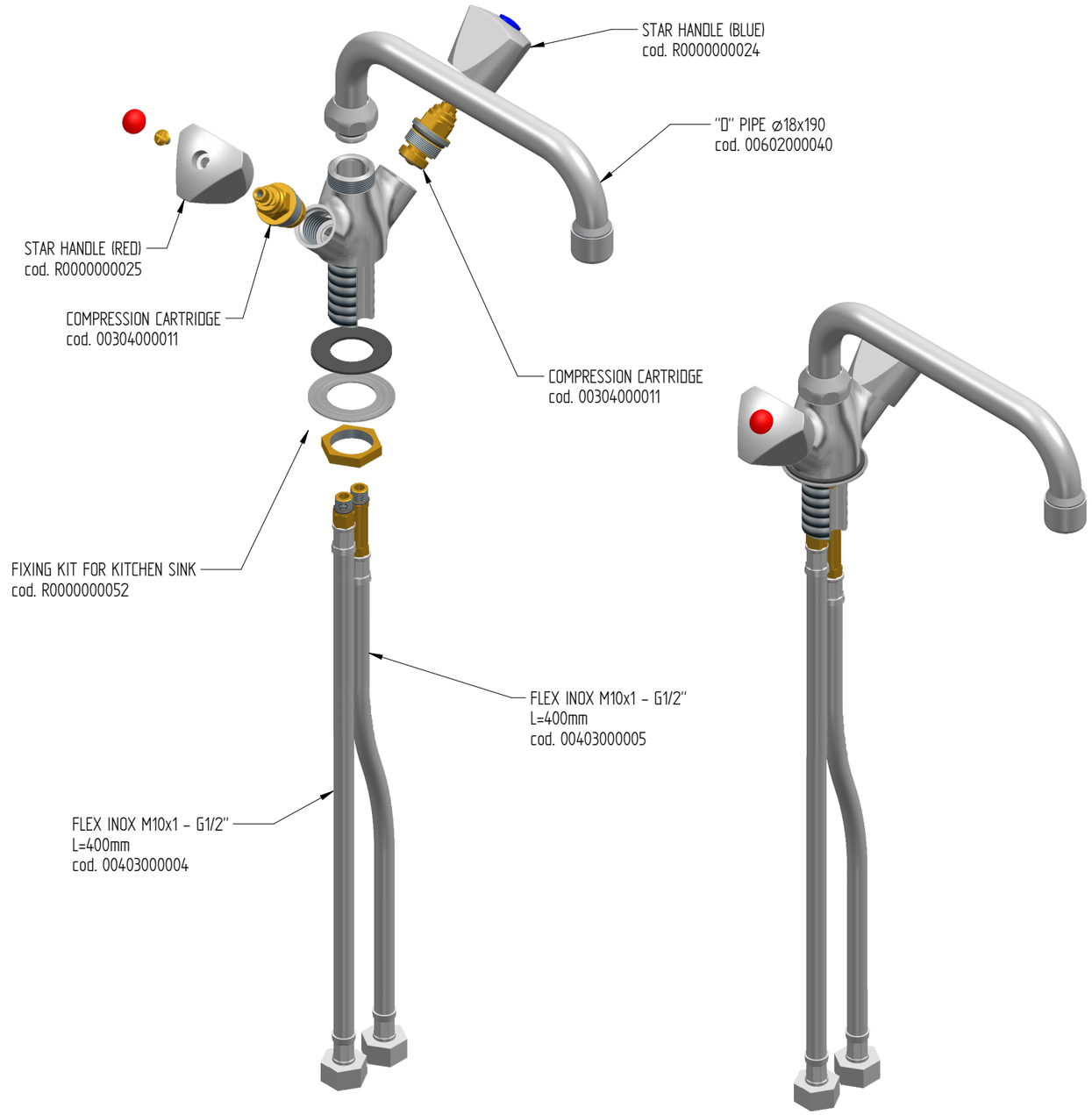

sink fixing hole : ϕ27 mm

Rev. 00