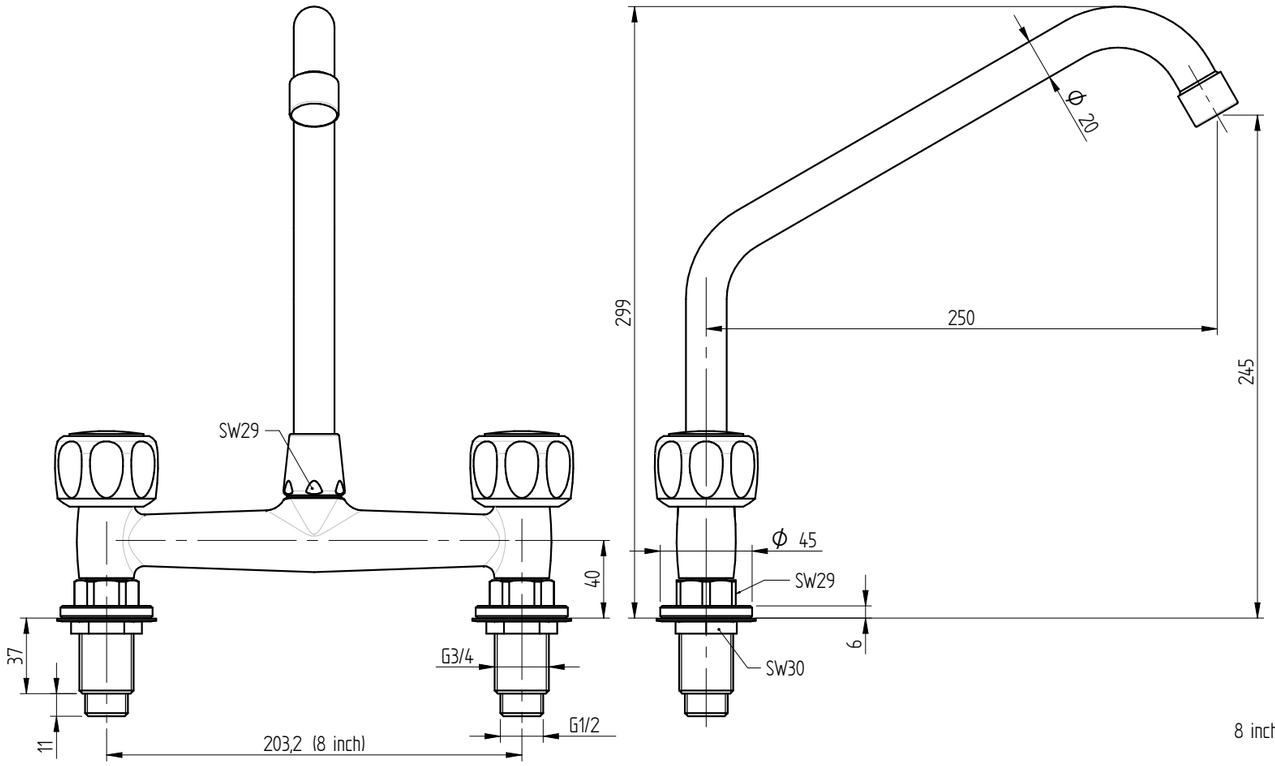

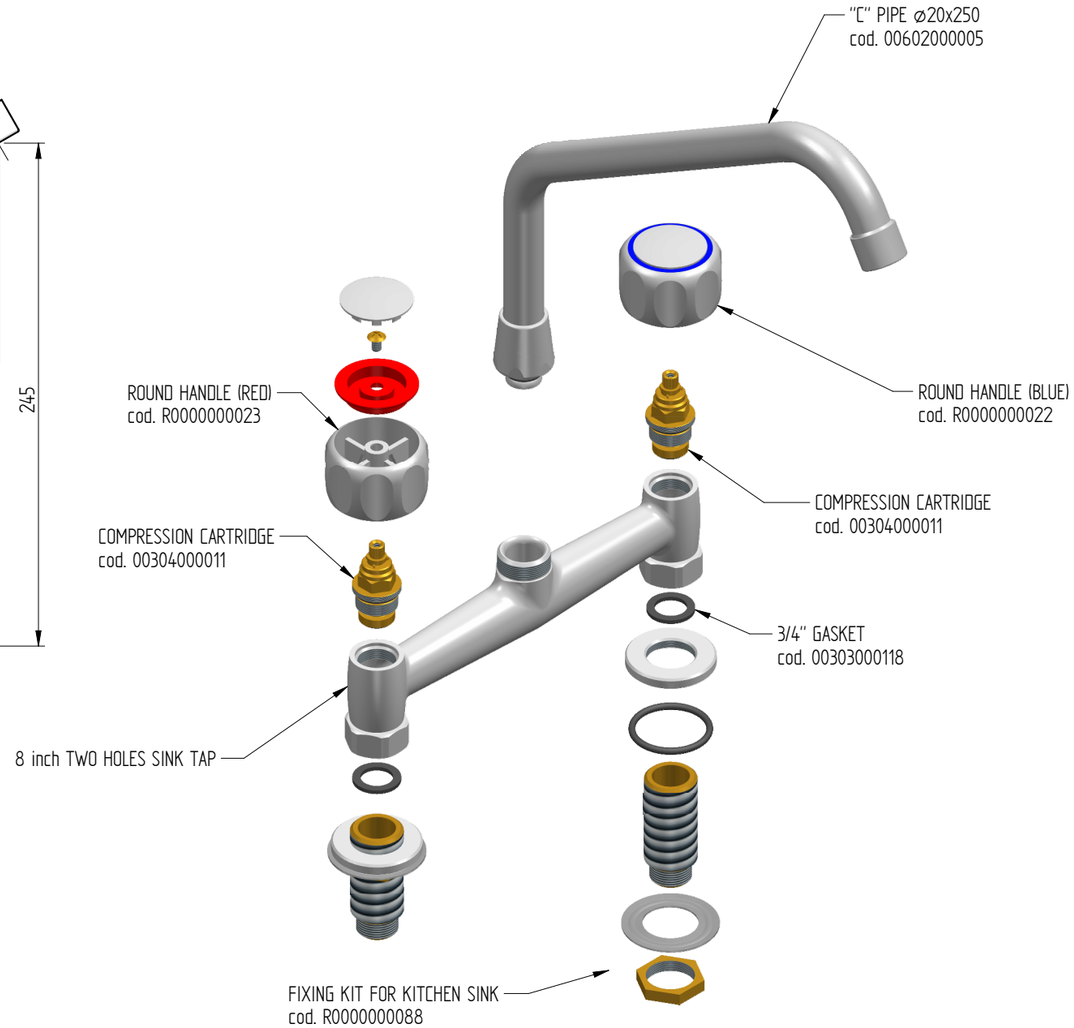

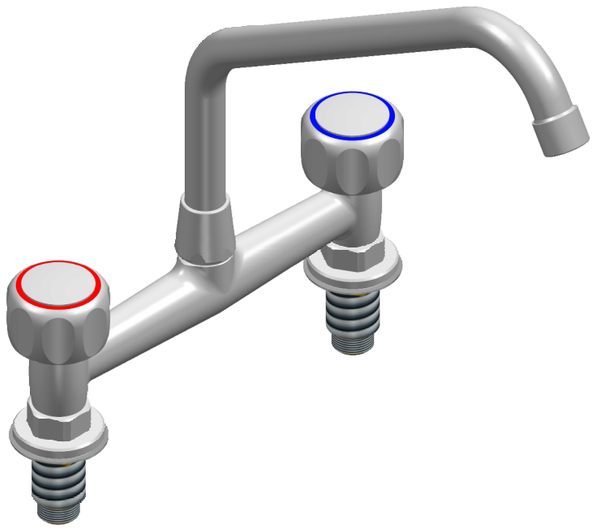

sink fixing holes : ø27 mm

Rev. 00