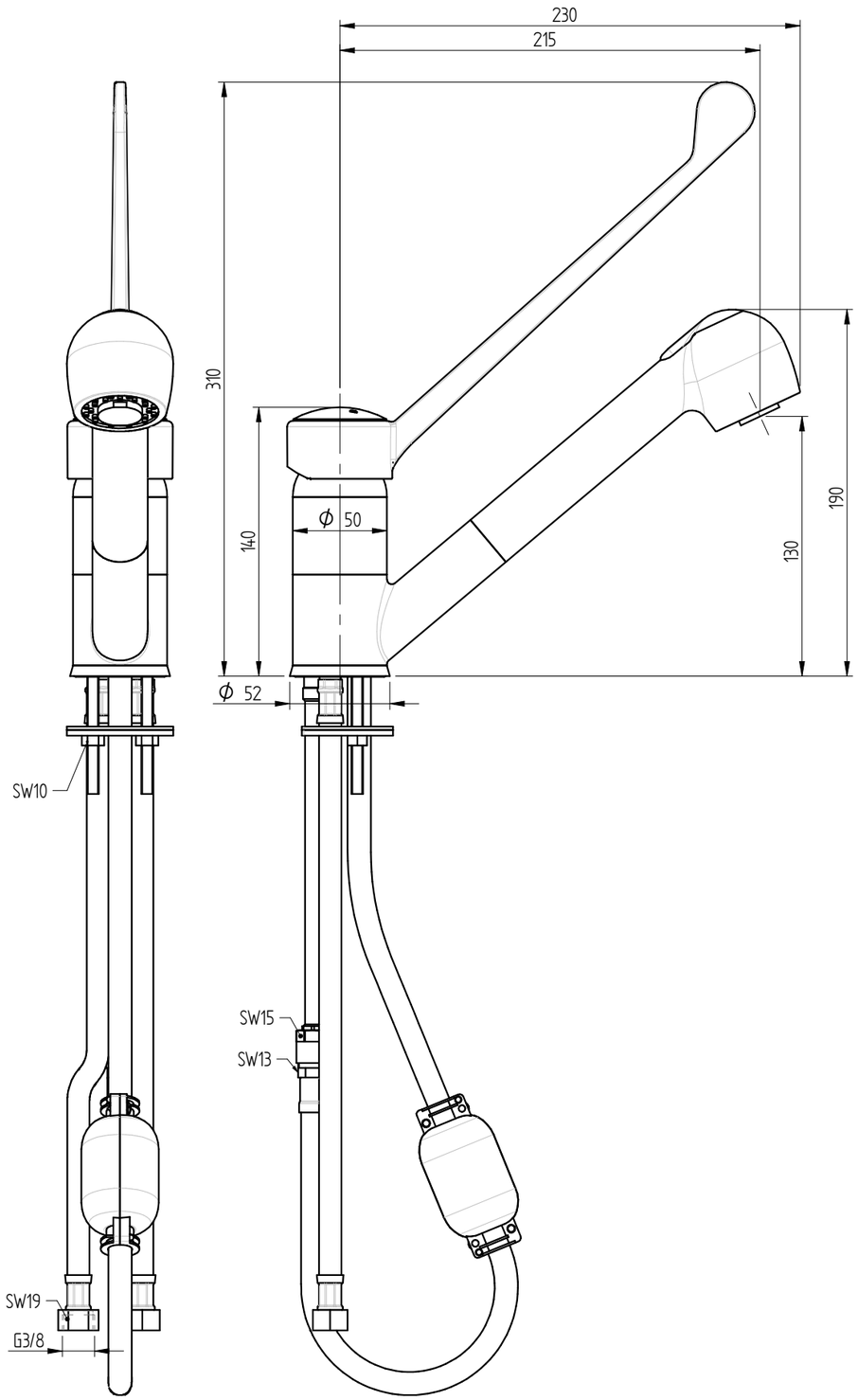

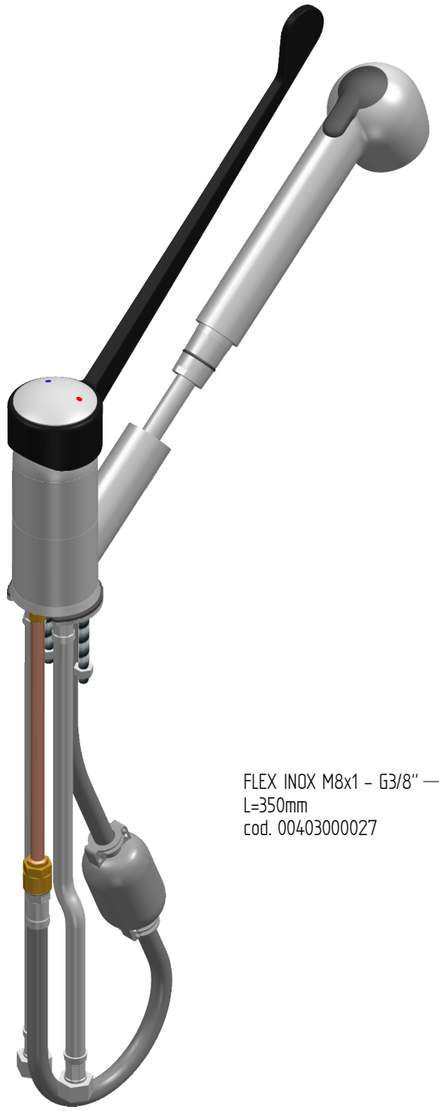

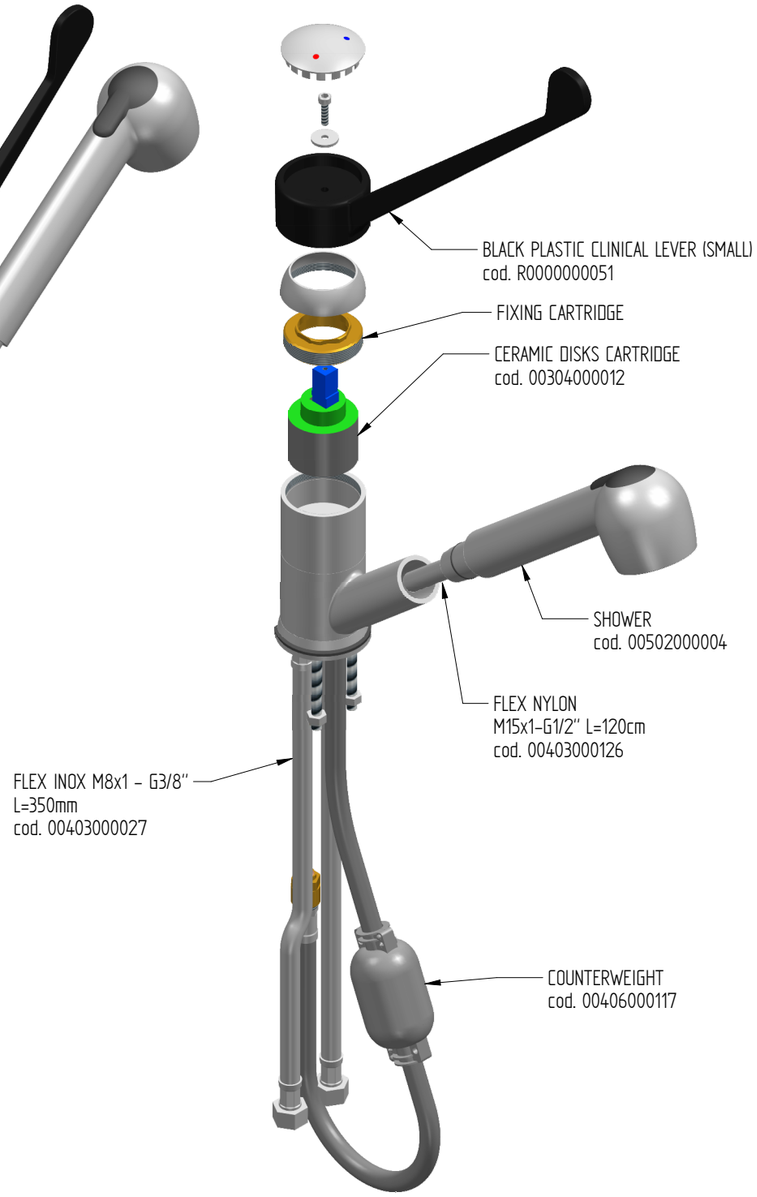

sink fixing hole : ø32mm (maximum)

Rev. 01 - 22/05/2020