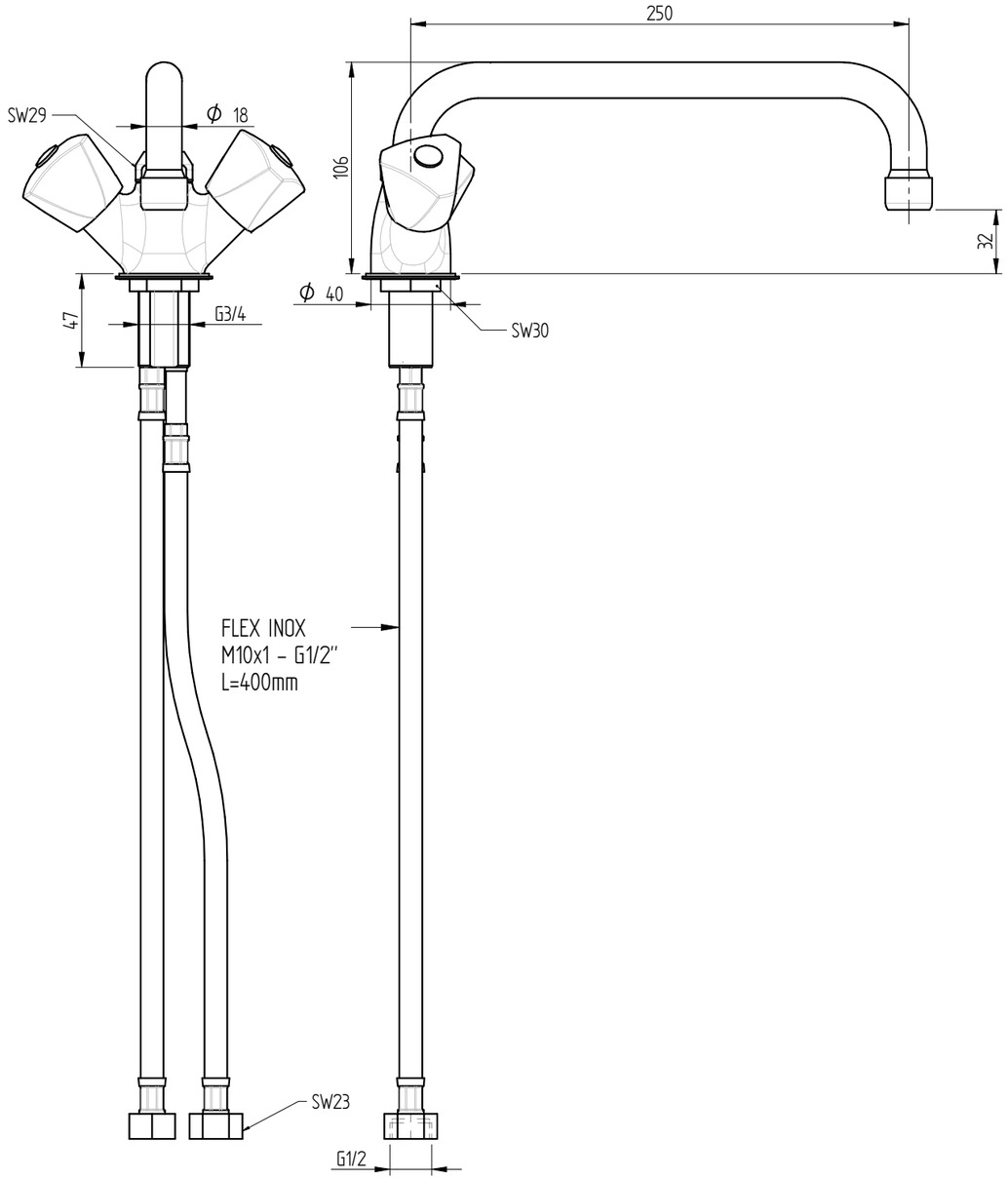

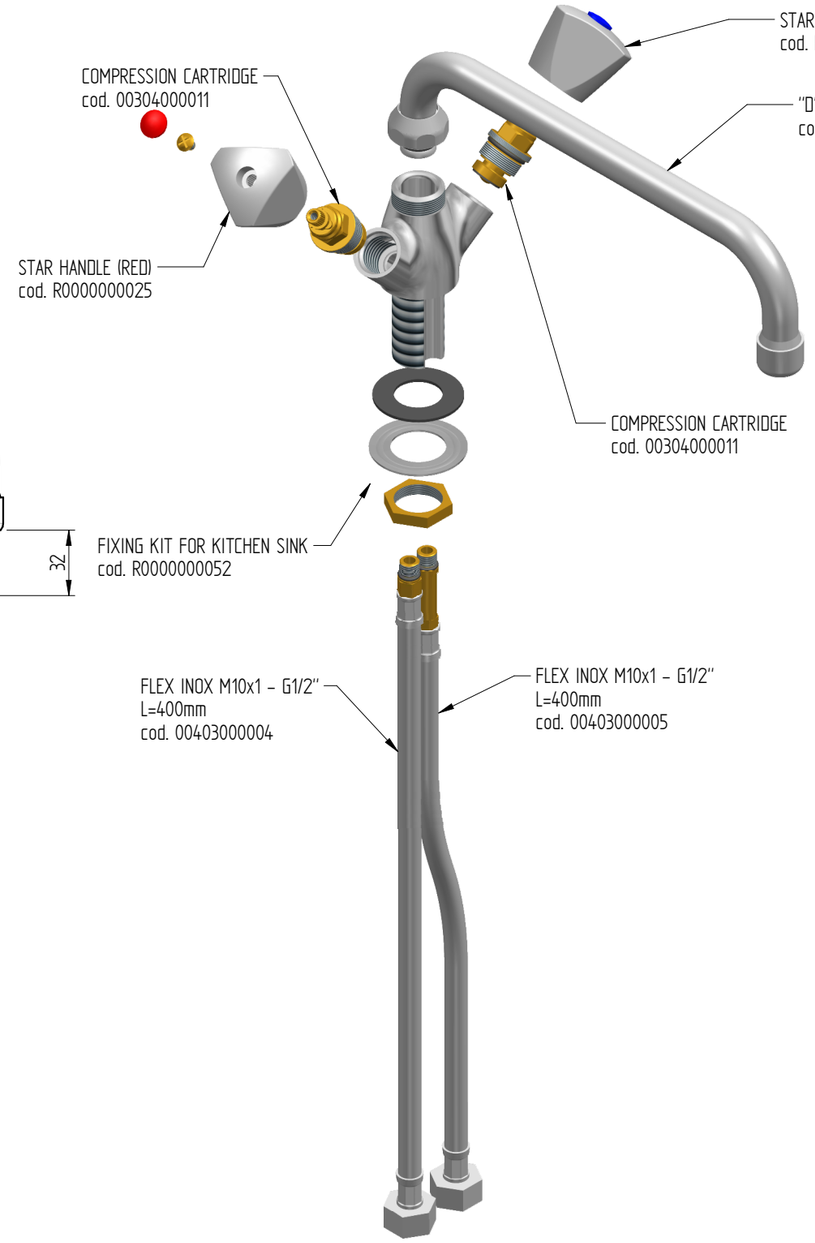

sink fixing hole : ⌀27 mm

Rev. 00