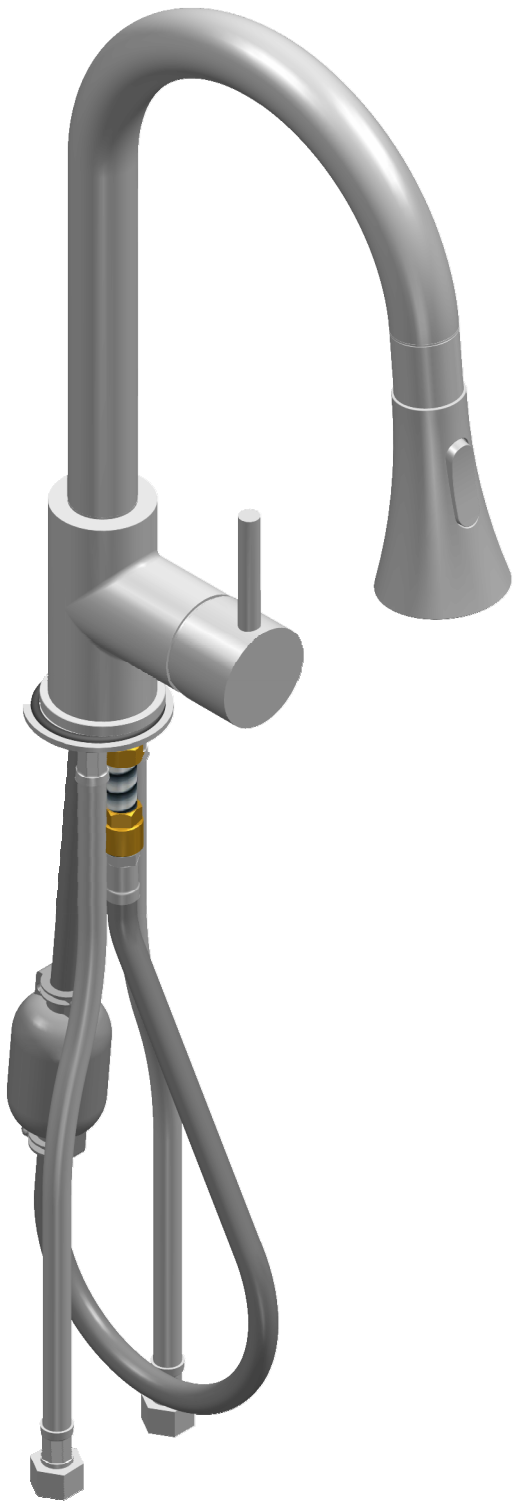

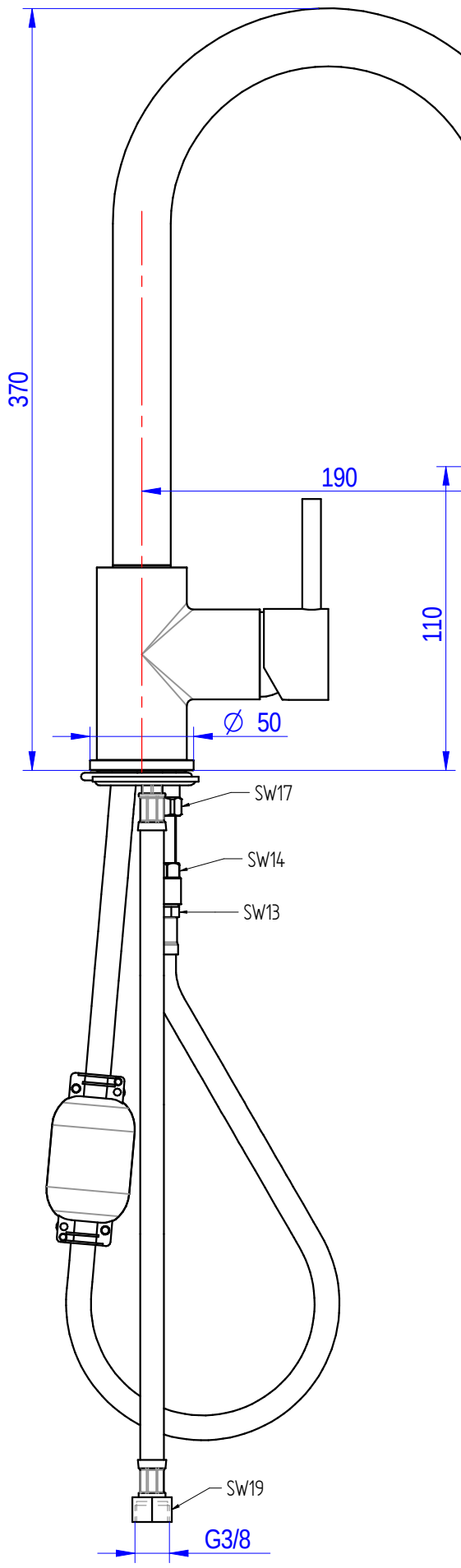

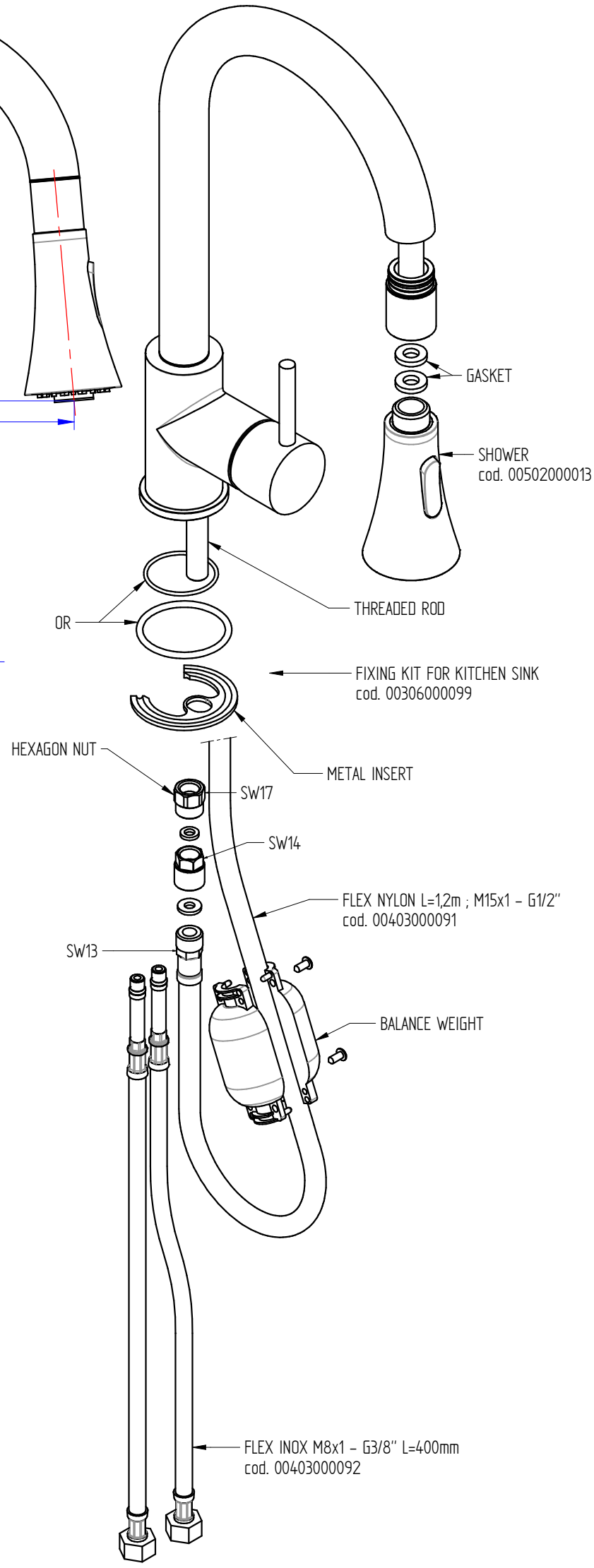

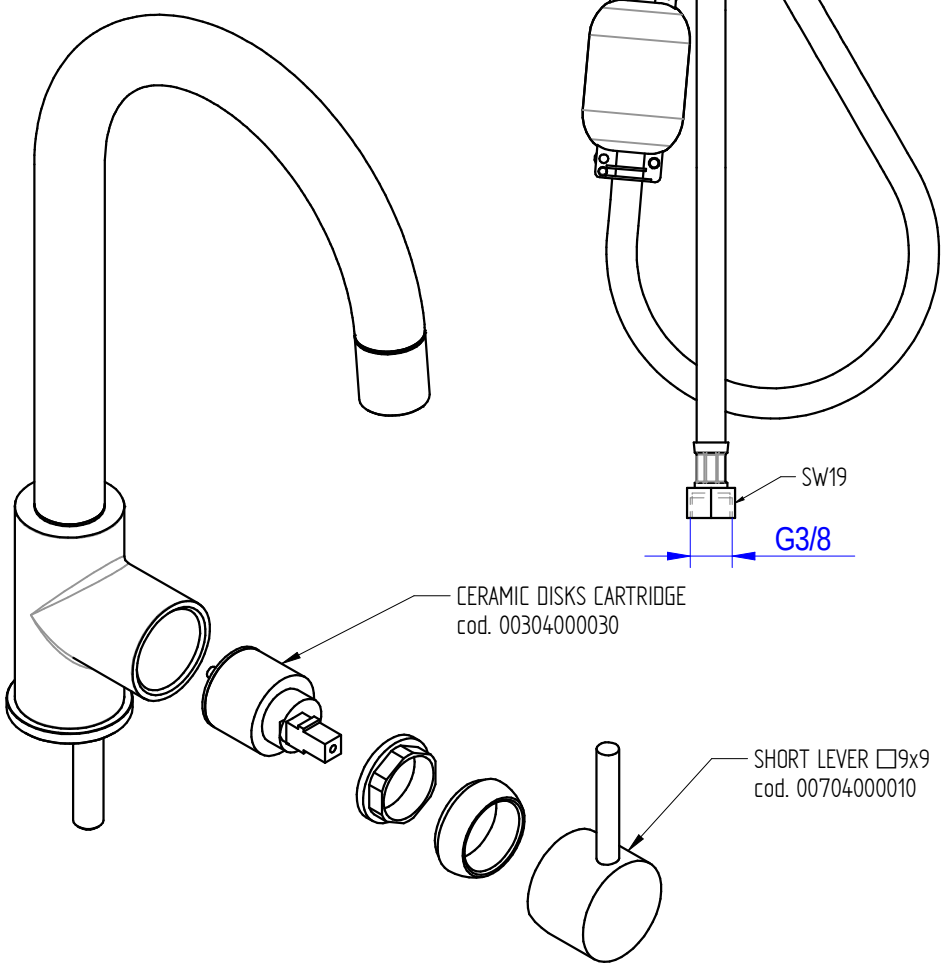

FLOW RATE : 8 L/min at 3,5 BAR with aerated shower jet

sink fixing hole : ø30 mm

Rev. 01