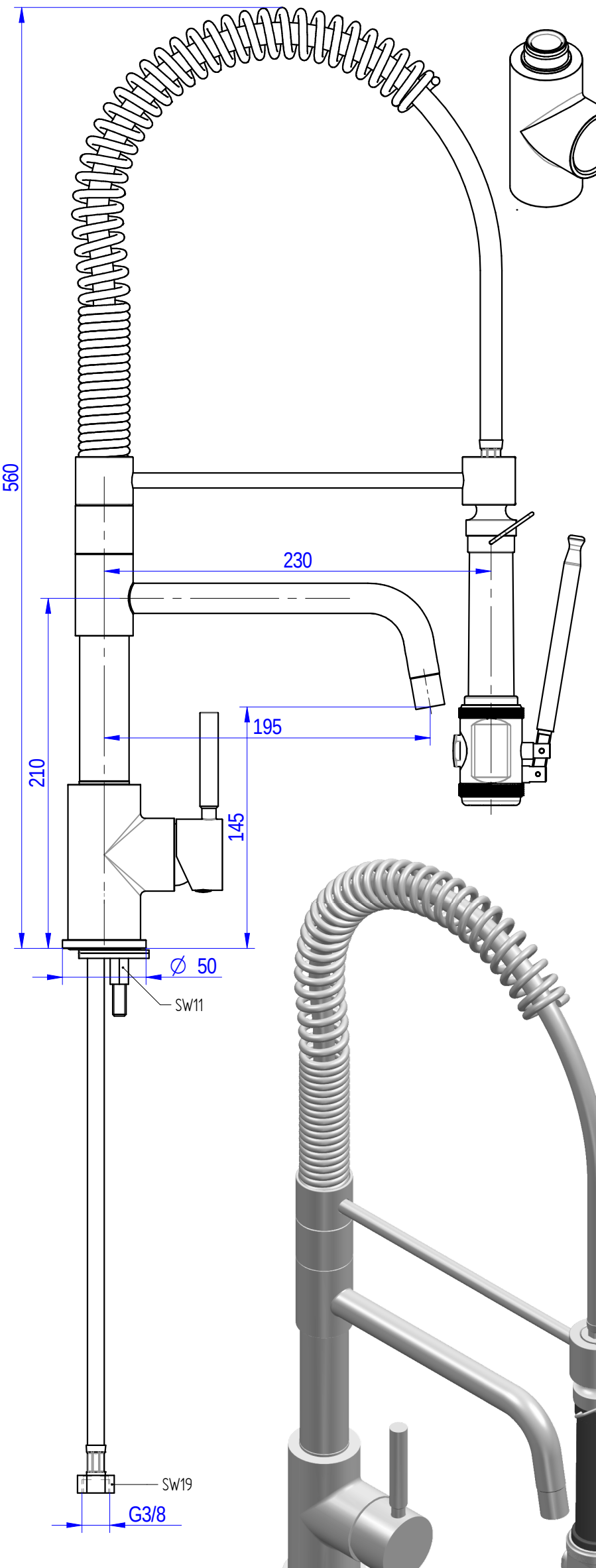

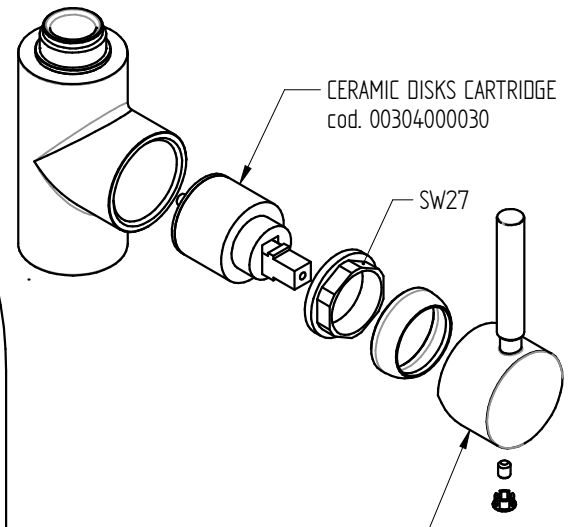

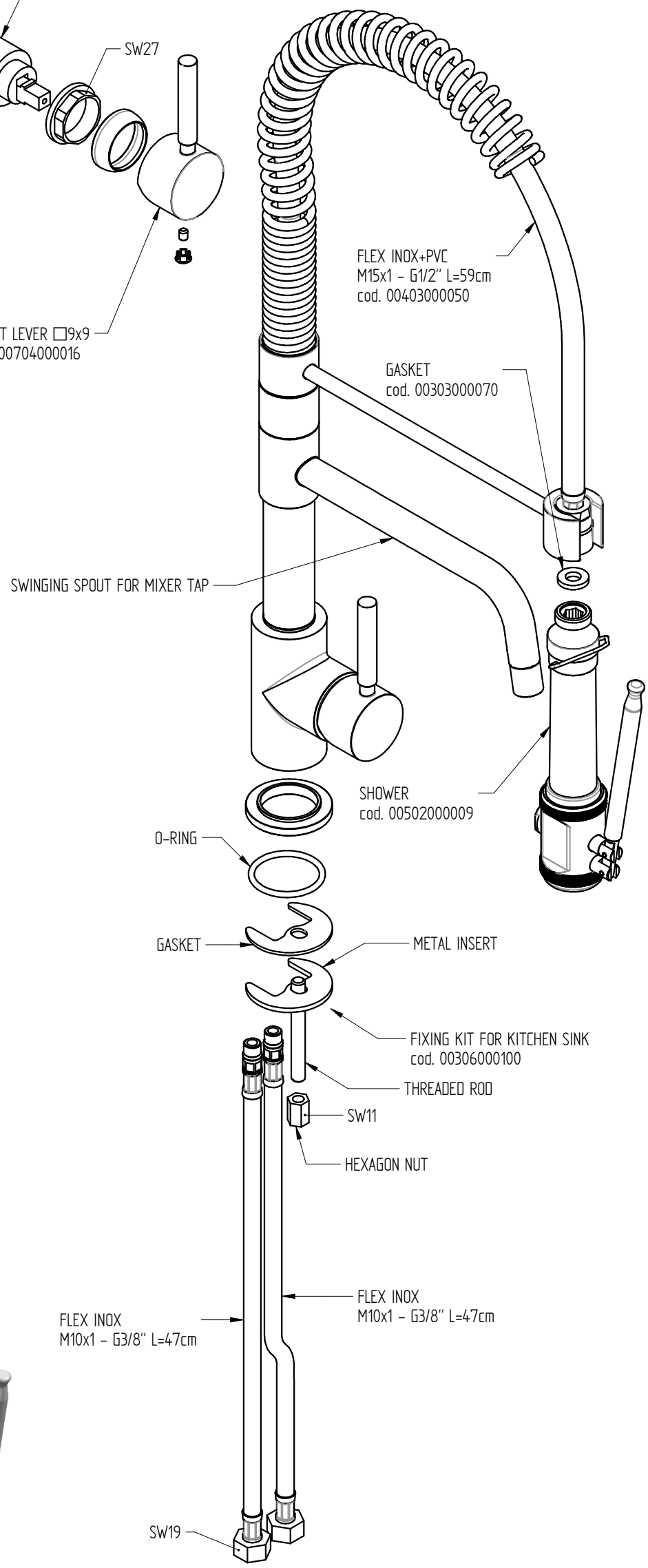

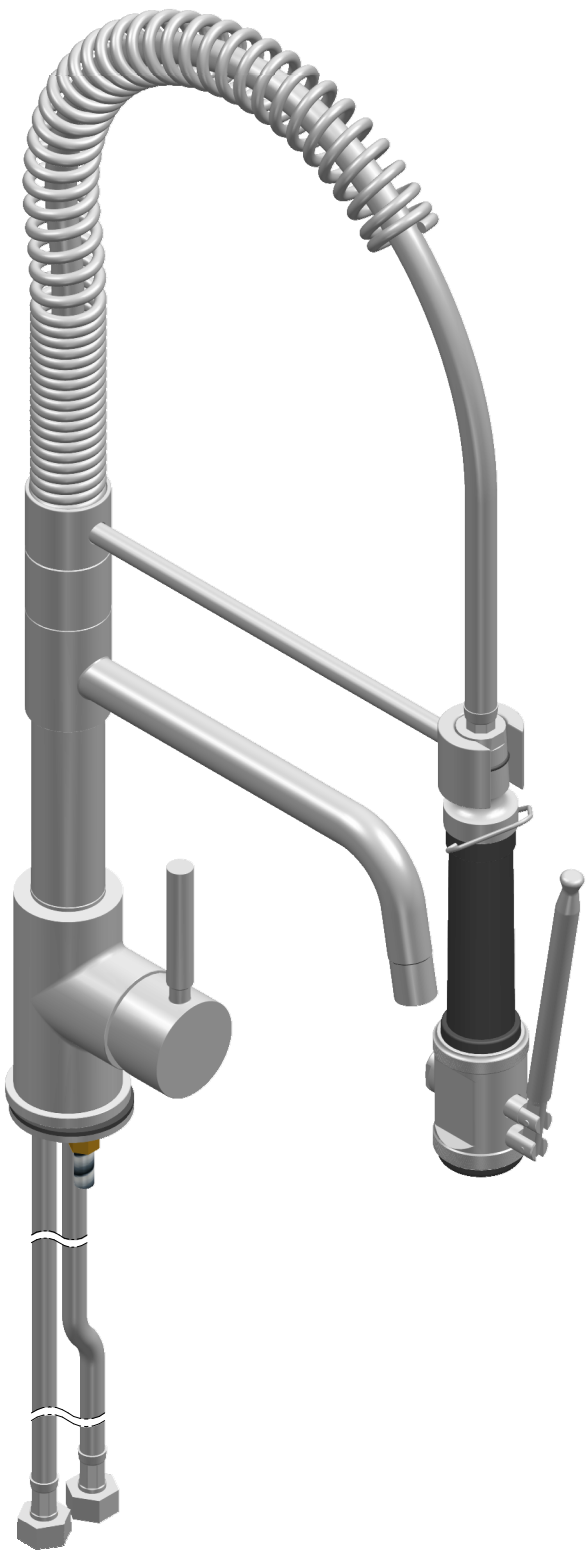

sink fixing hole : ø30 mm

Rev. 00