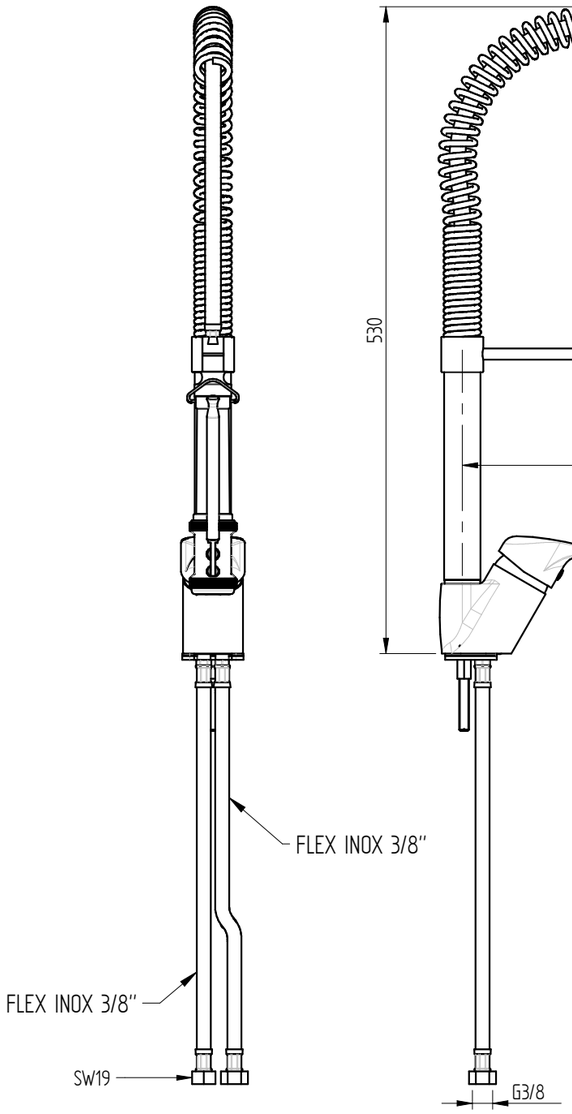

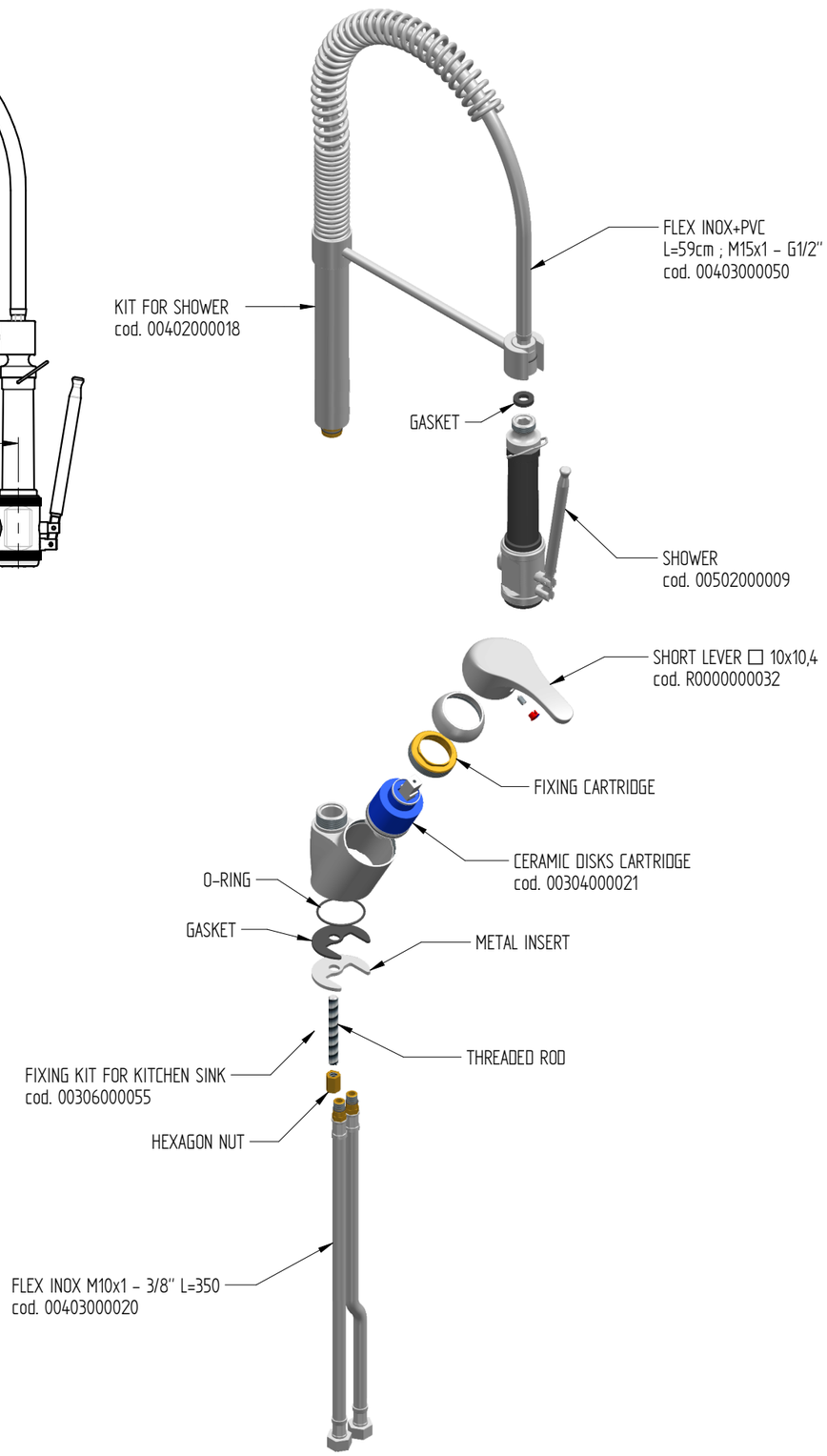

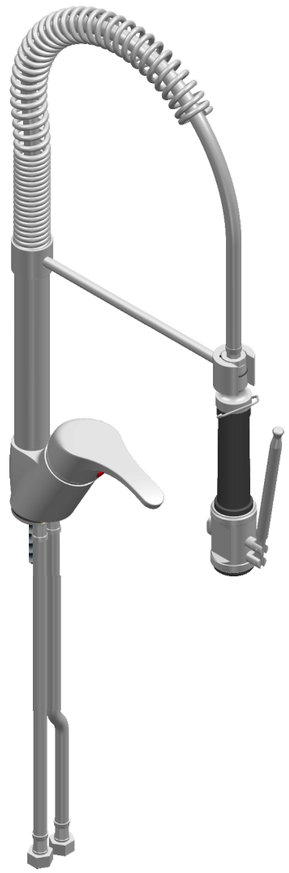

sink fixing hole : ø35 mm (maximum)

Rev. 00