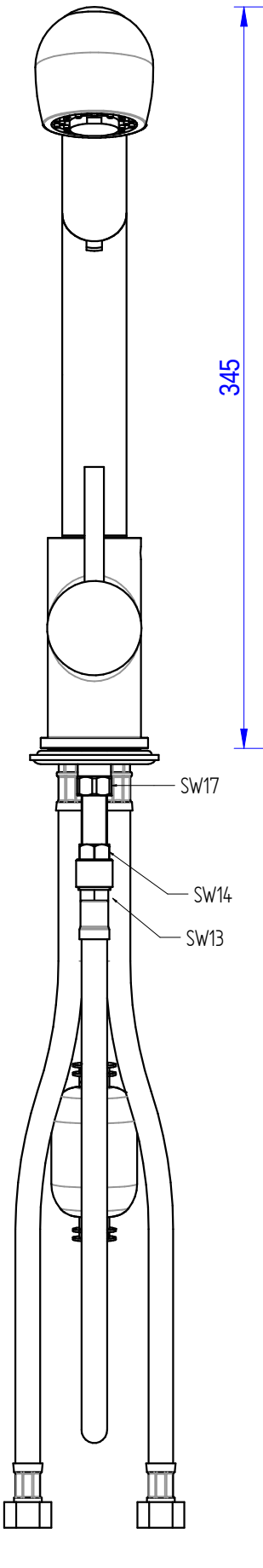

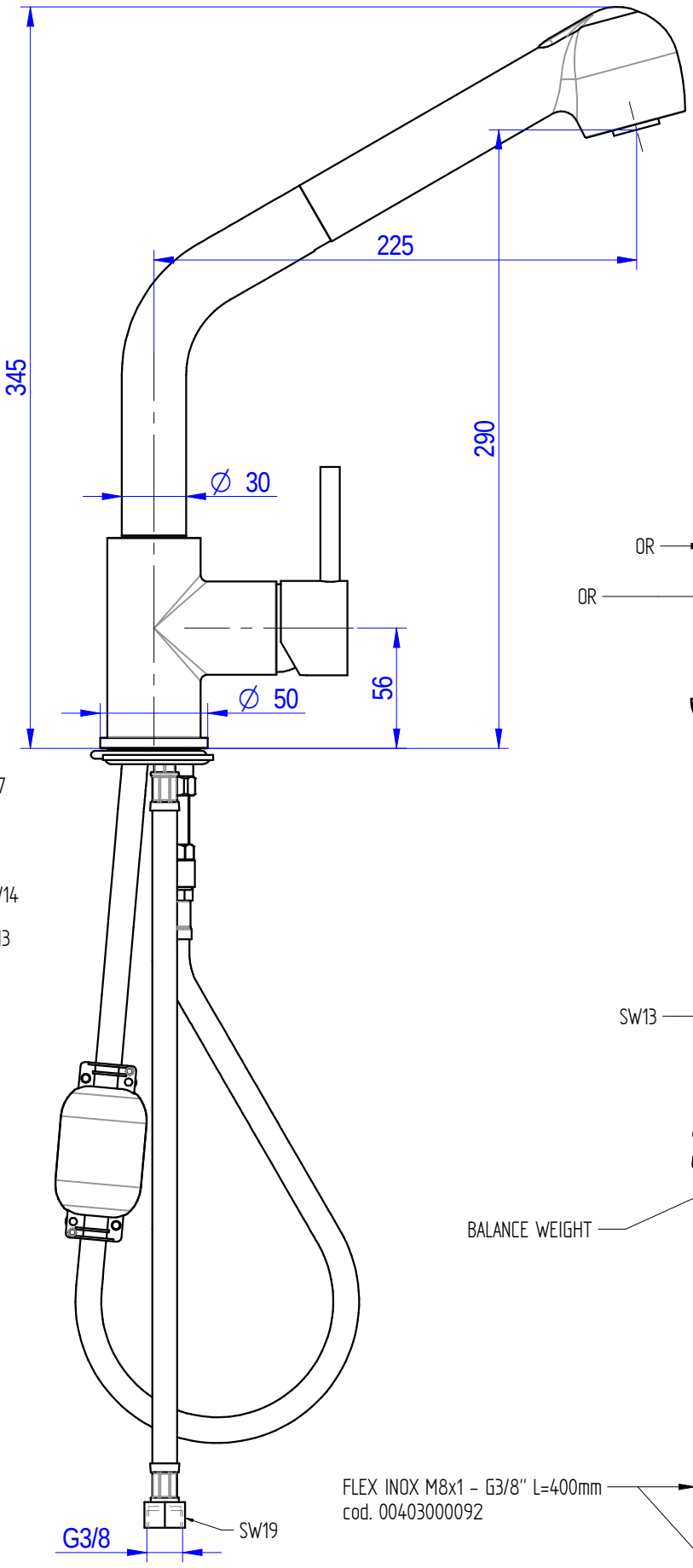

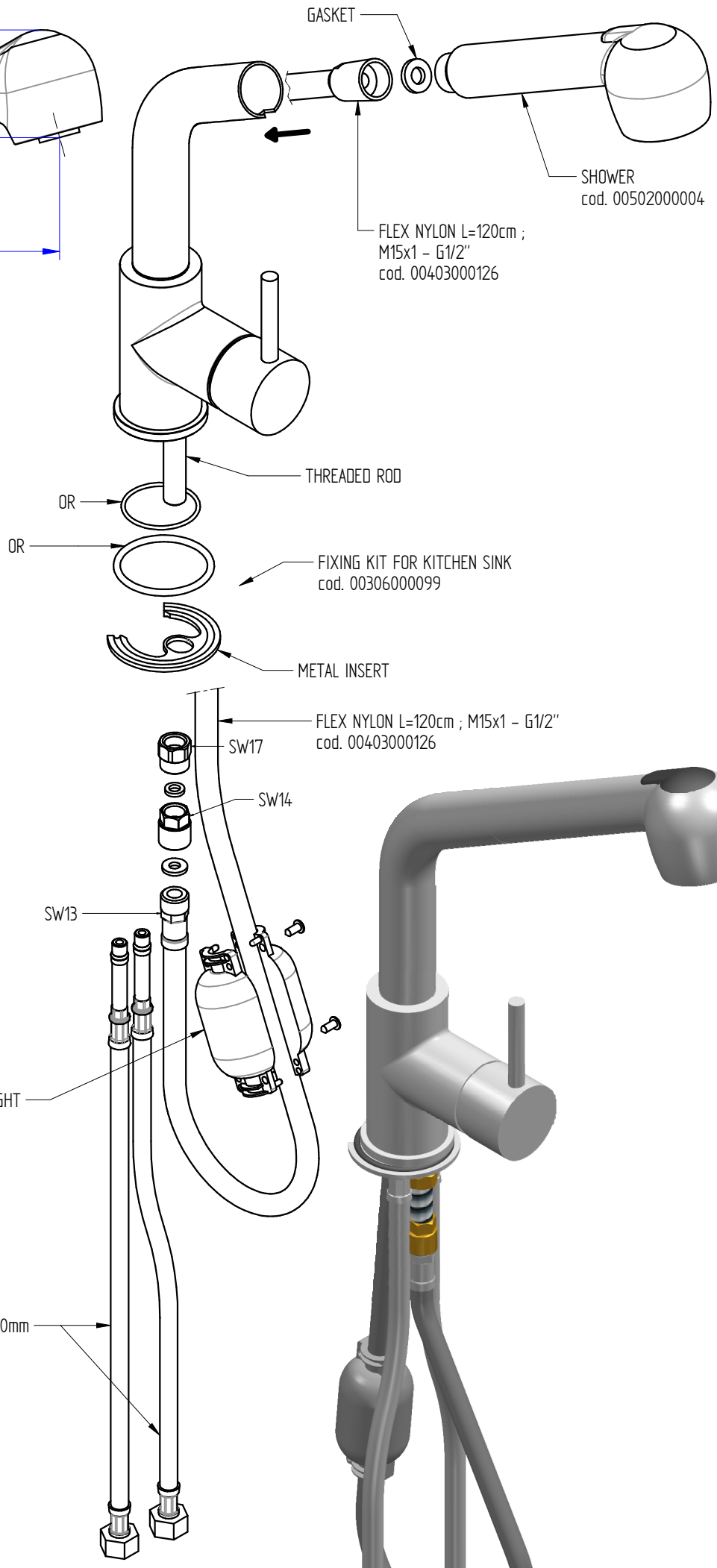

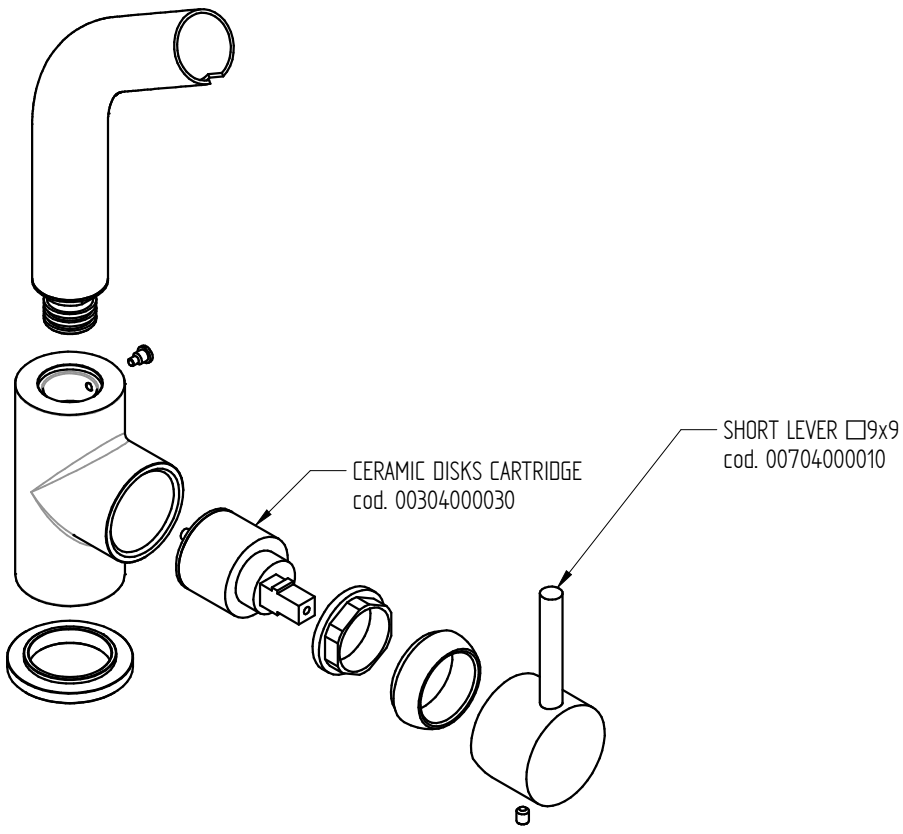

FLOW RATE : 8 L/min at 3,5 BAR with aerated shower jet
10 L/min at 3,5 BAR with spray shower jet

sink fixing hole : ø30 mm

Rev. 00