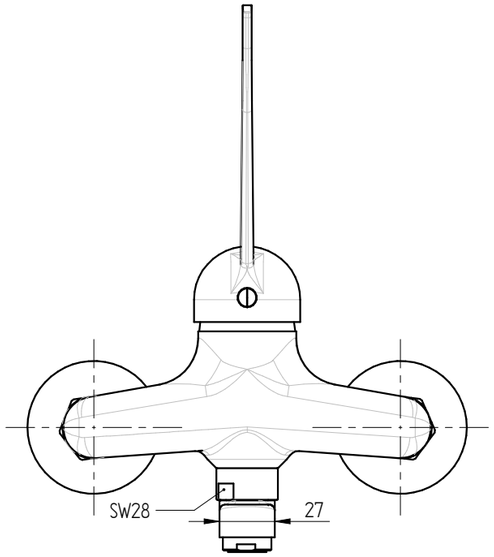
SW28
27

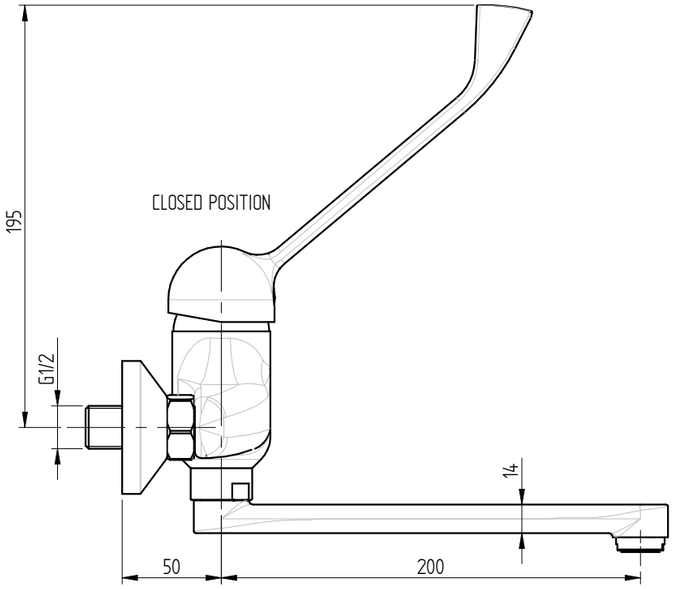
CLOSED POSITION
195
G1/2
14
50
200

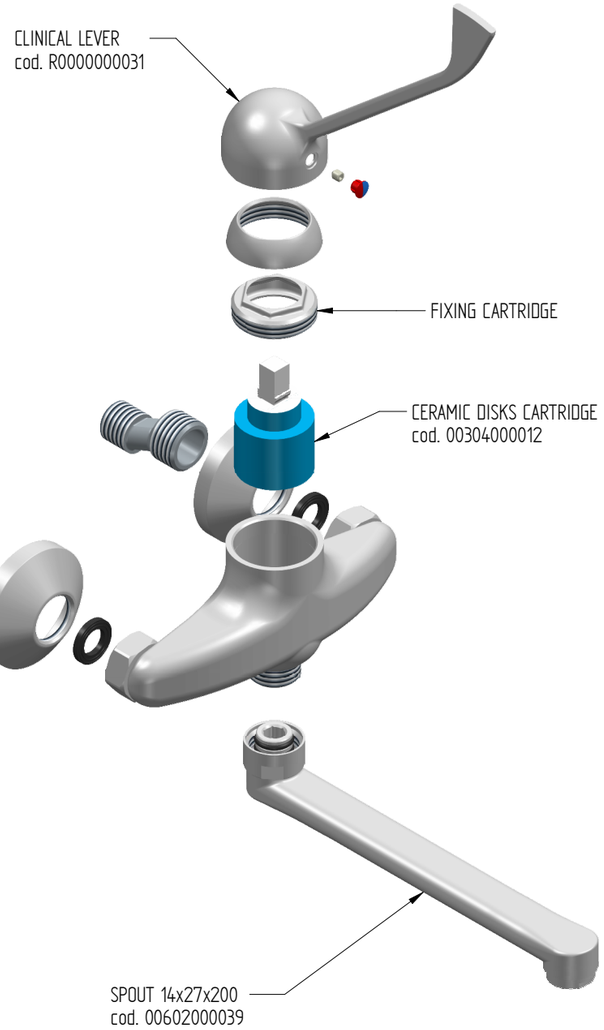
CLINICAL LEVER
cod. R0000000031
FIXING CARTRIDGE
CERAMIC DISKS CARTRIDGE
cod. 00304000012
ECCENTRIC G1/2" - G3/4"
cod. 00406000125
SPOUT 14x27x200
cod. 00602000039

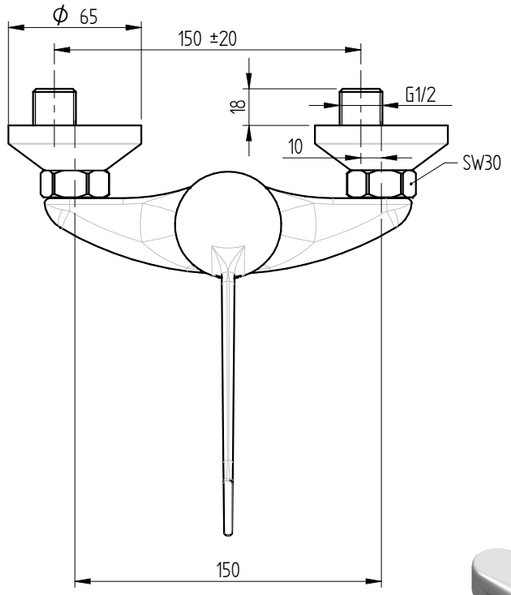
Φ 65
150 ±20
18
G1/2
10
SW30
150

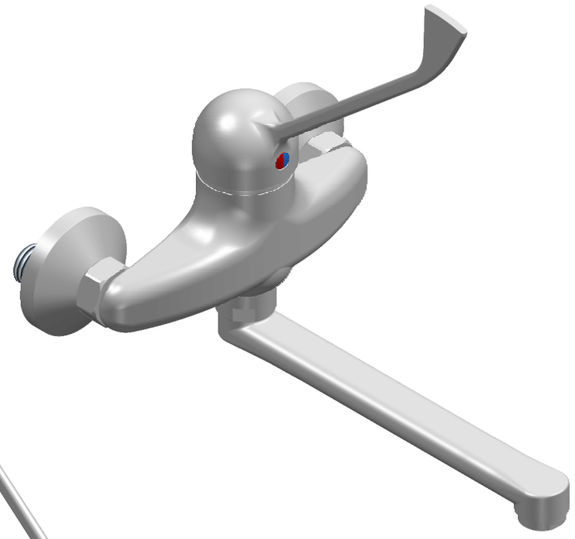

Rev. 00