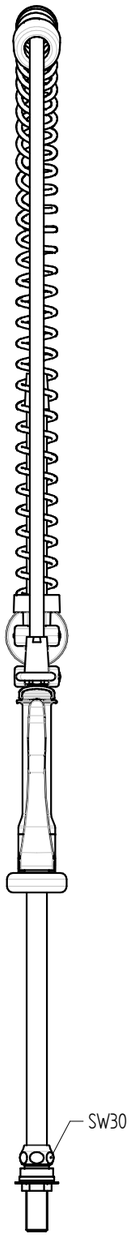

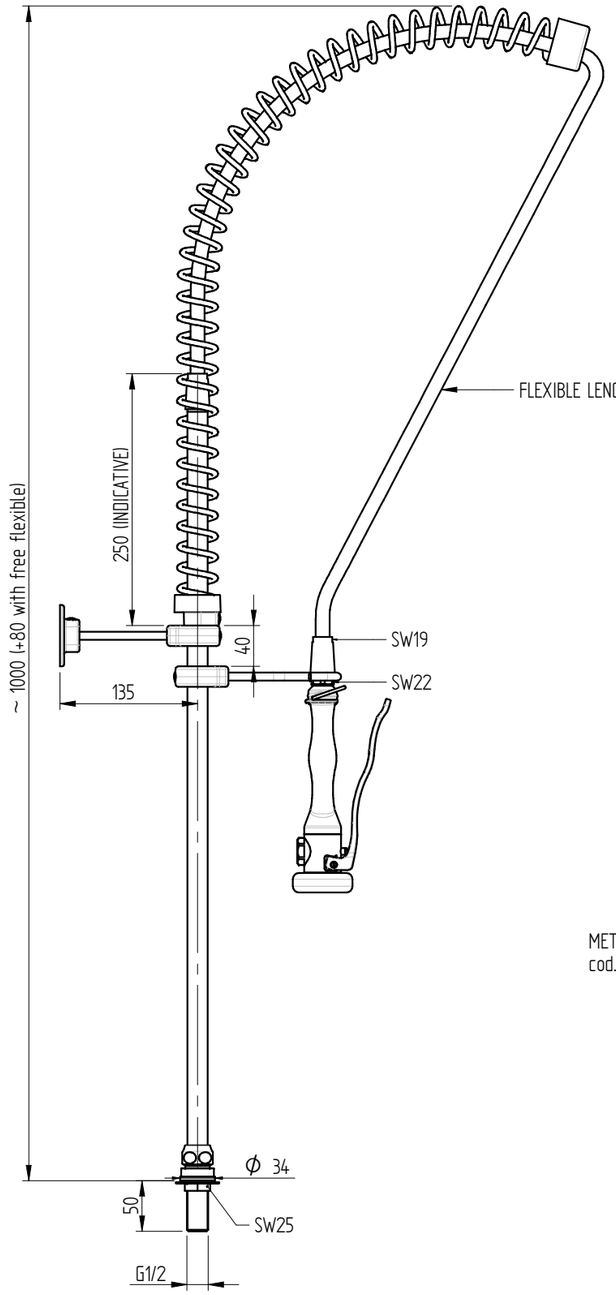

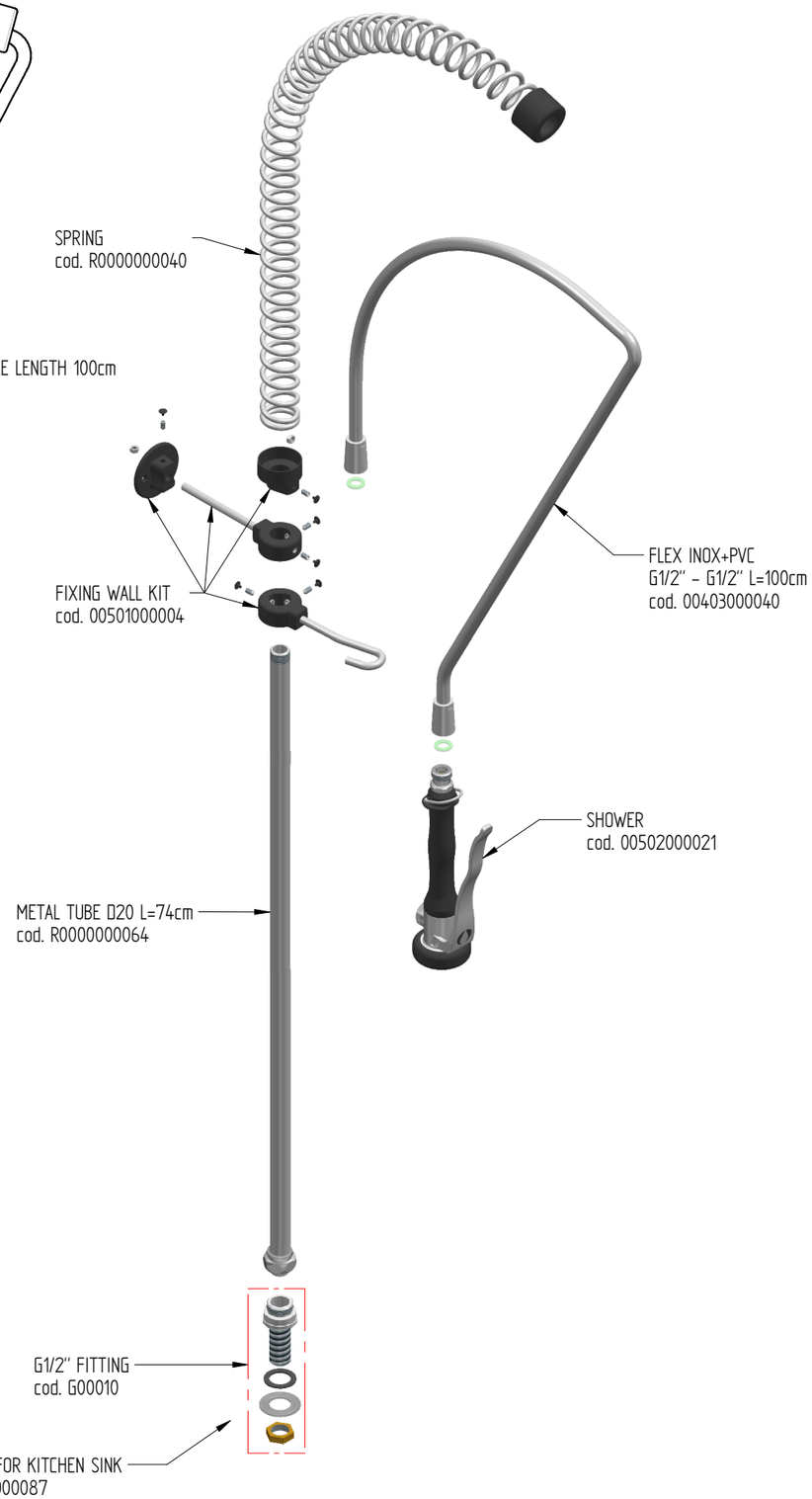

FLOW RATE : 12 L/min at 3,5 BAR only from the shower

sink fixing hole : ø21,5 mm

Rev. 00