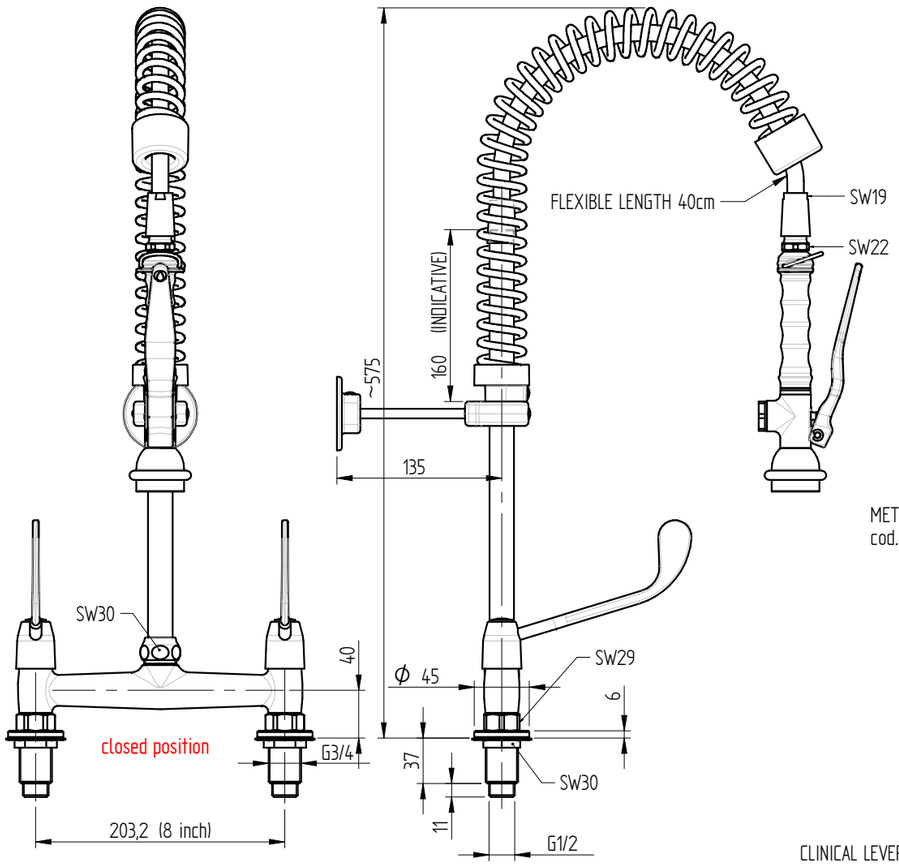

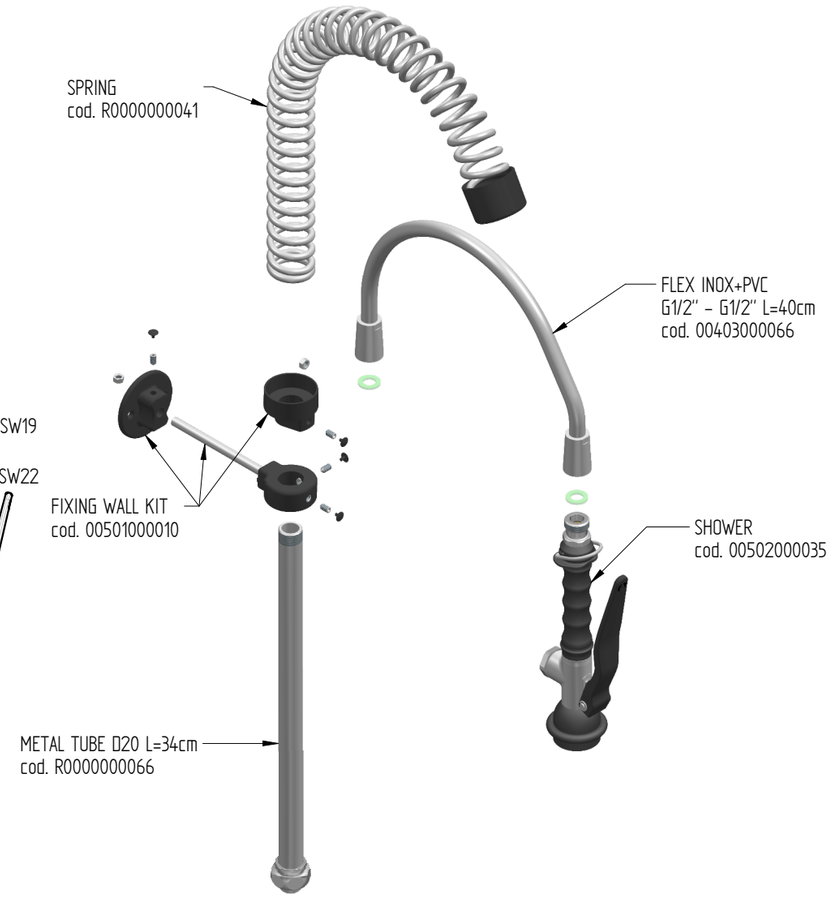

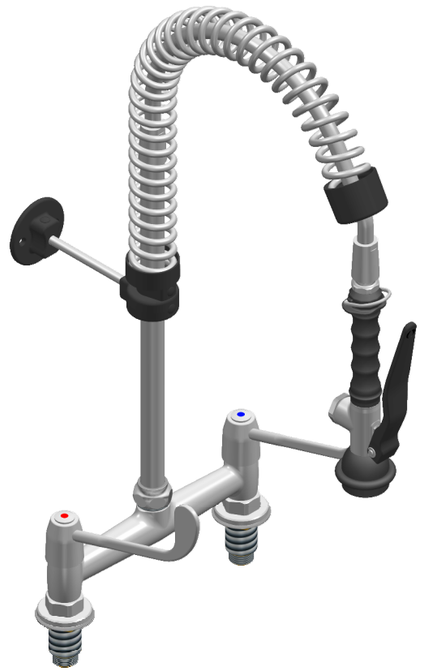

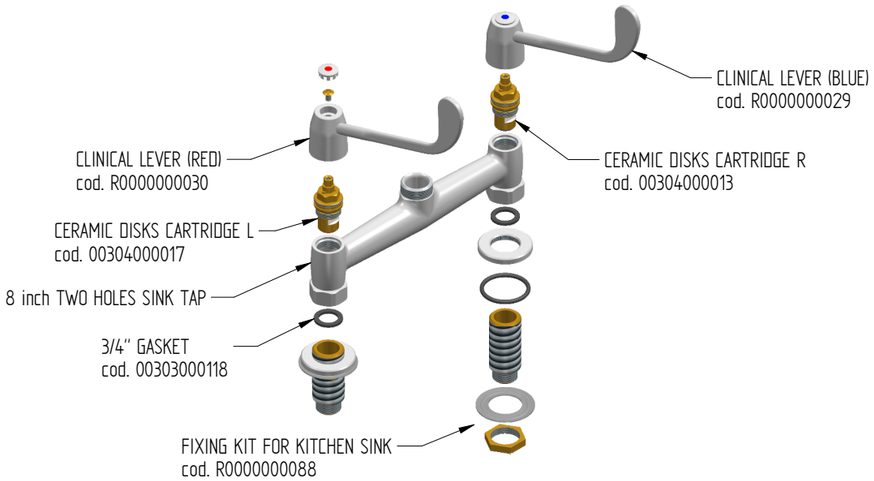

FLOW RATE : 12 L/min at 3,5 BAR only from the shower

Rev. 00