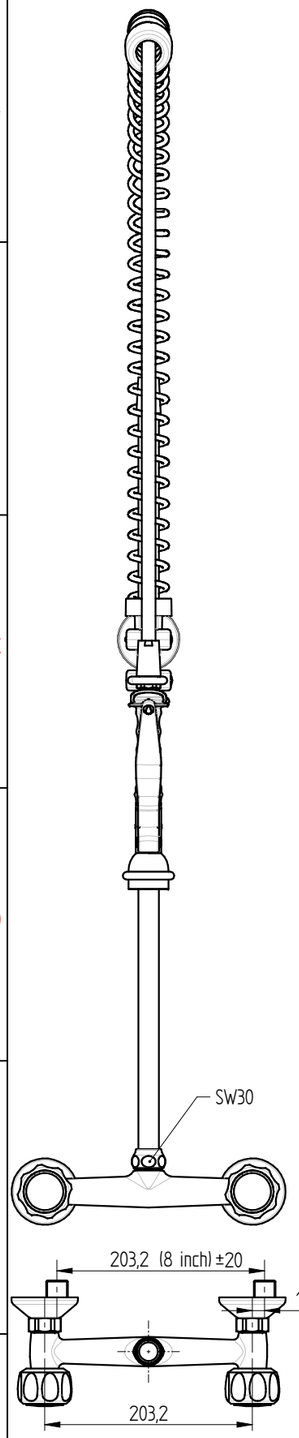

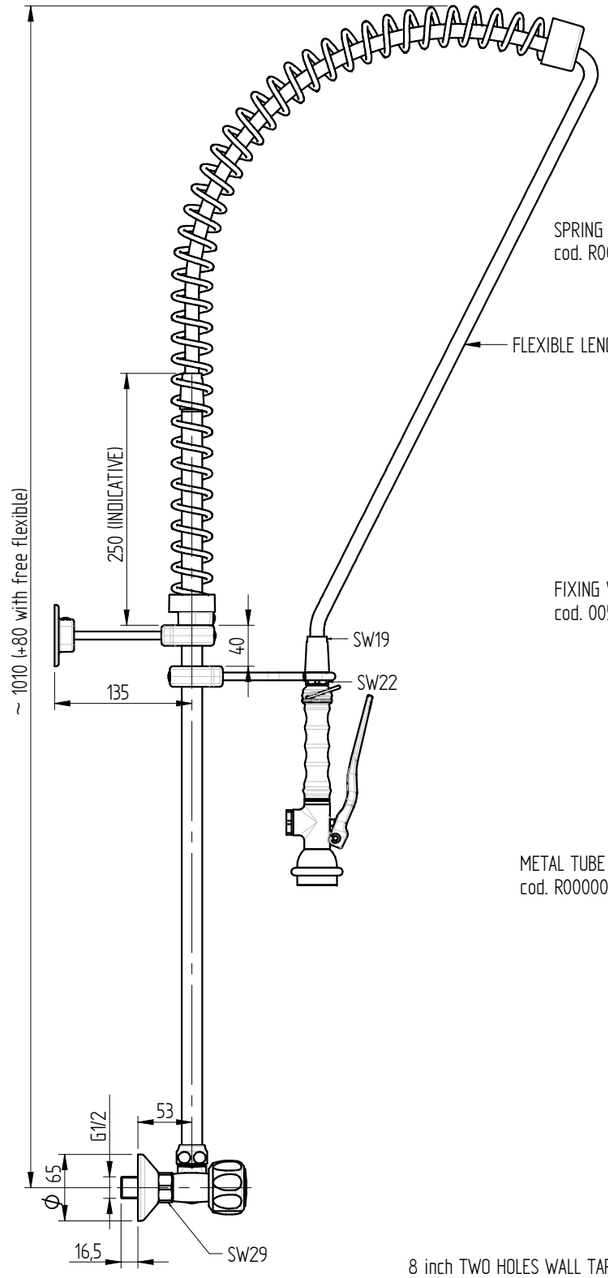

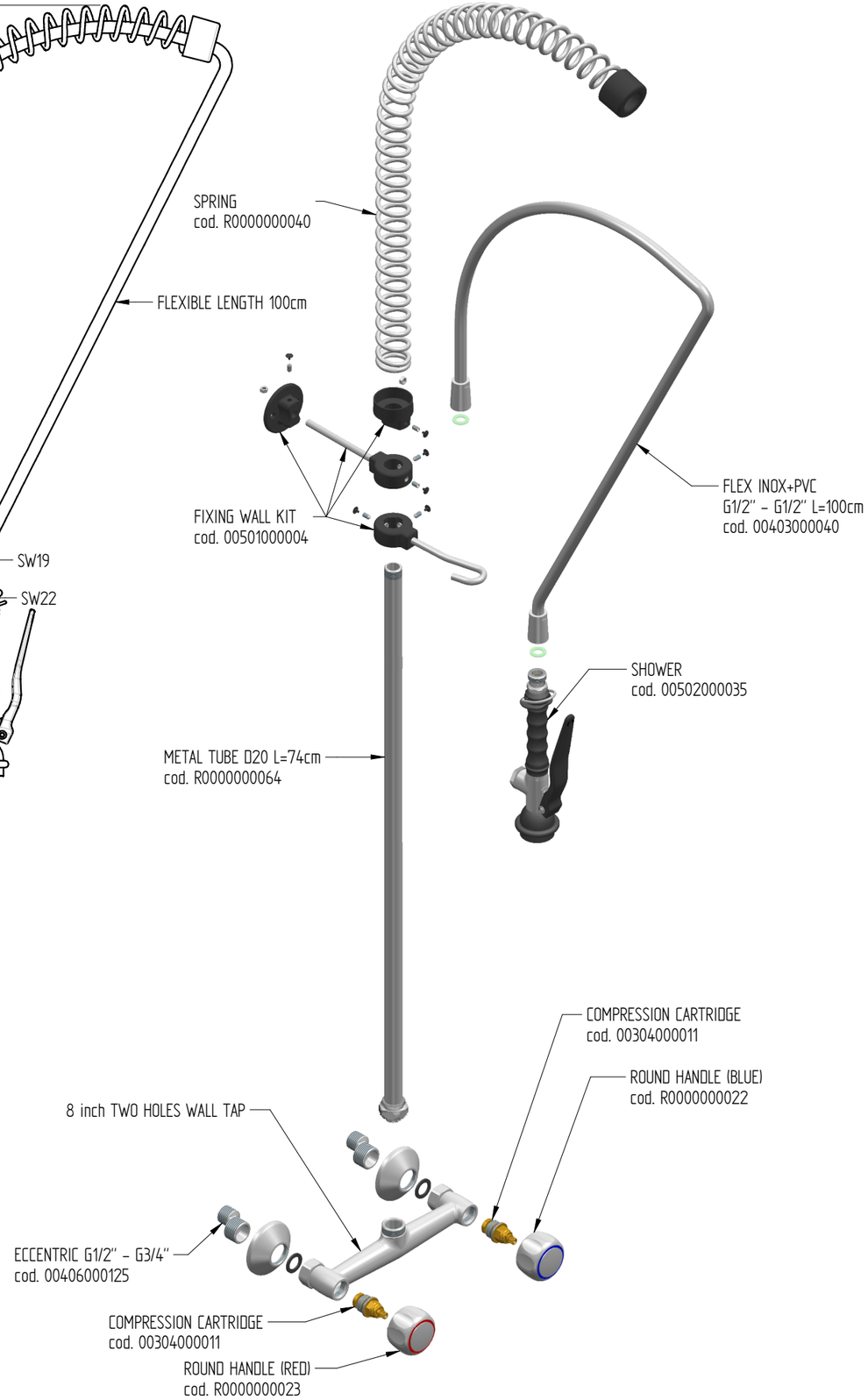

FLOW RATE : 12 L/min at 3,5 BAR only from the shower

Rev. 01 - 12/04/2022