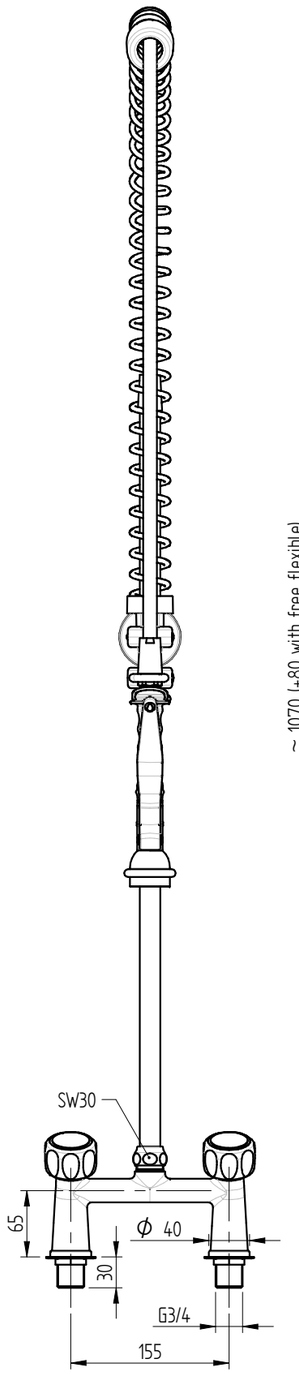

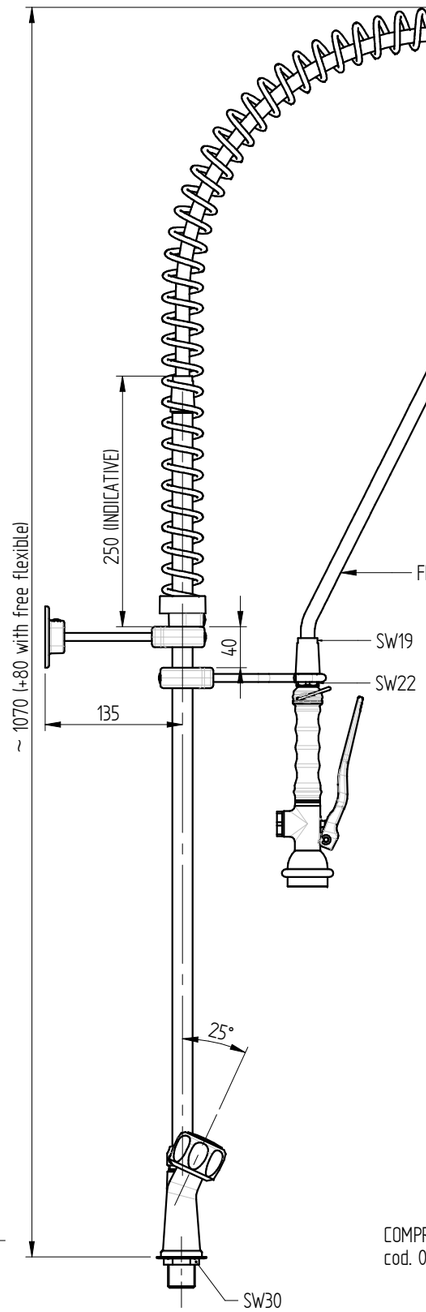

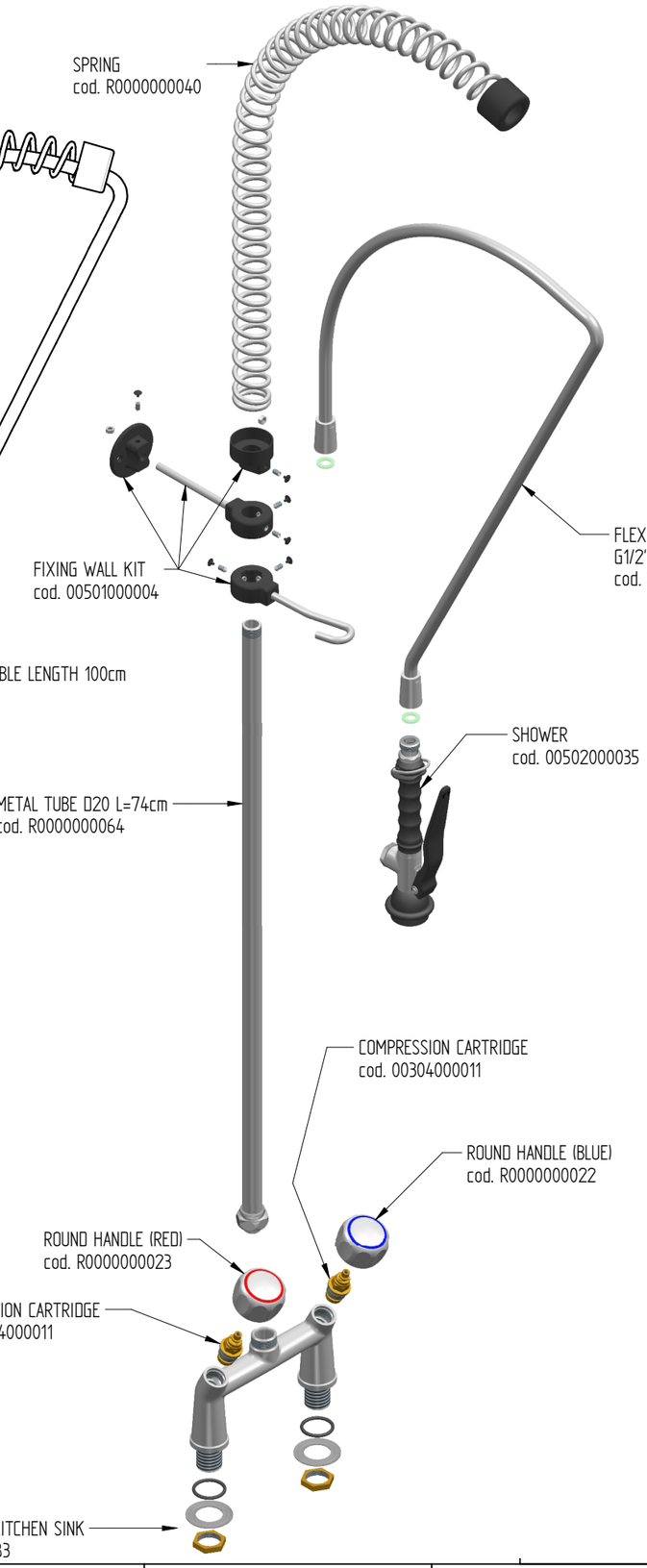

FLOW RATE : 12 L/min at 3,5 BAR only from the shower

sink fixing holes : ø27 mm

Rev. 01 - 06/04/2022