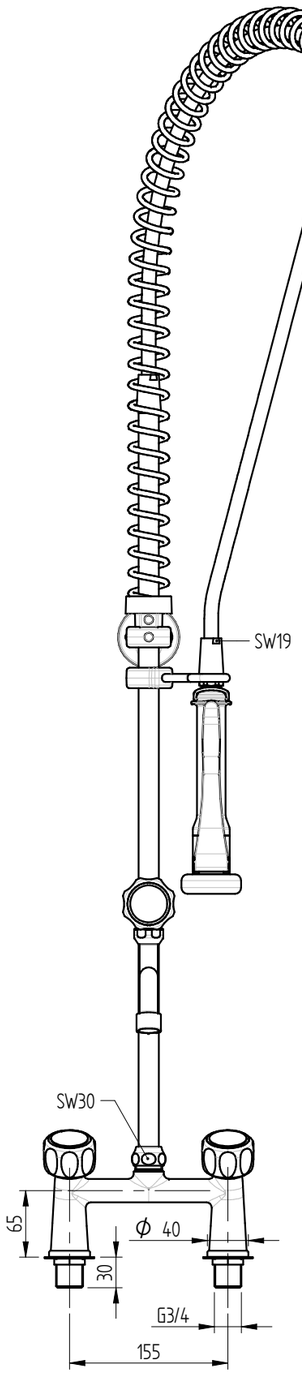

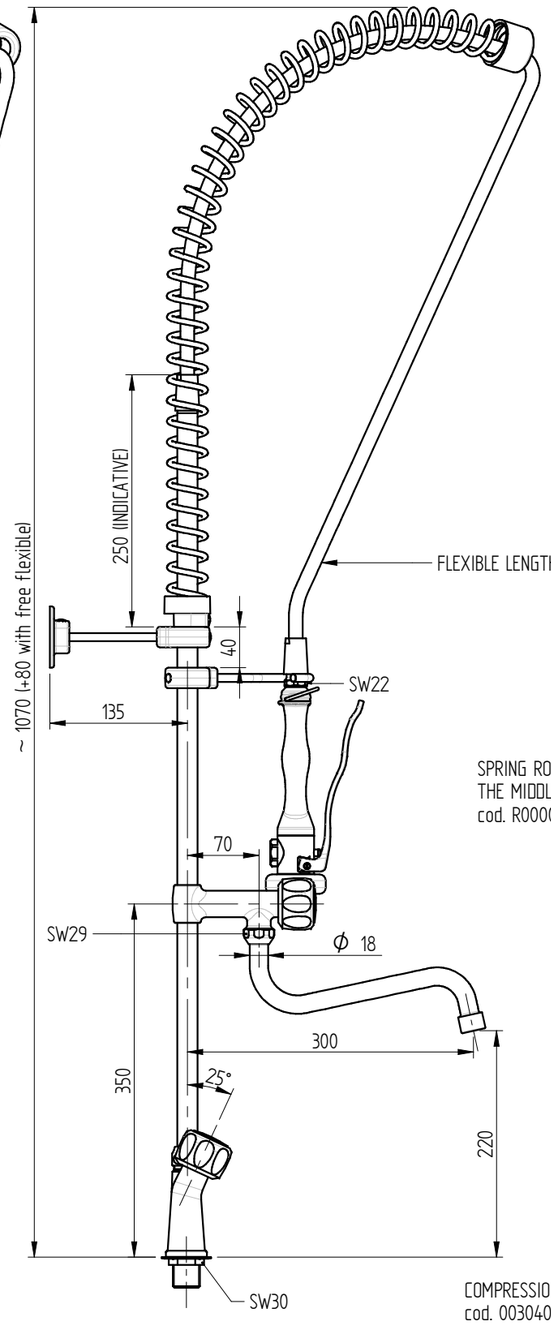

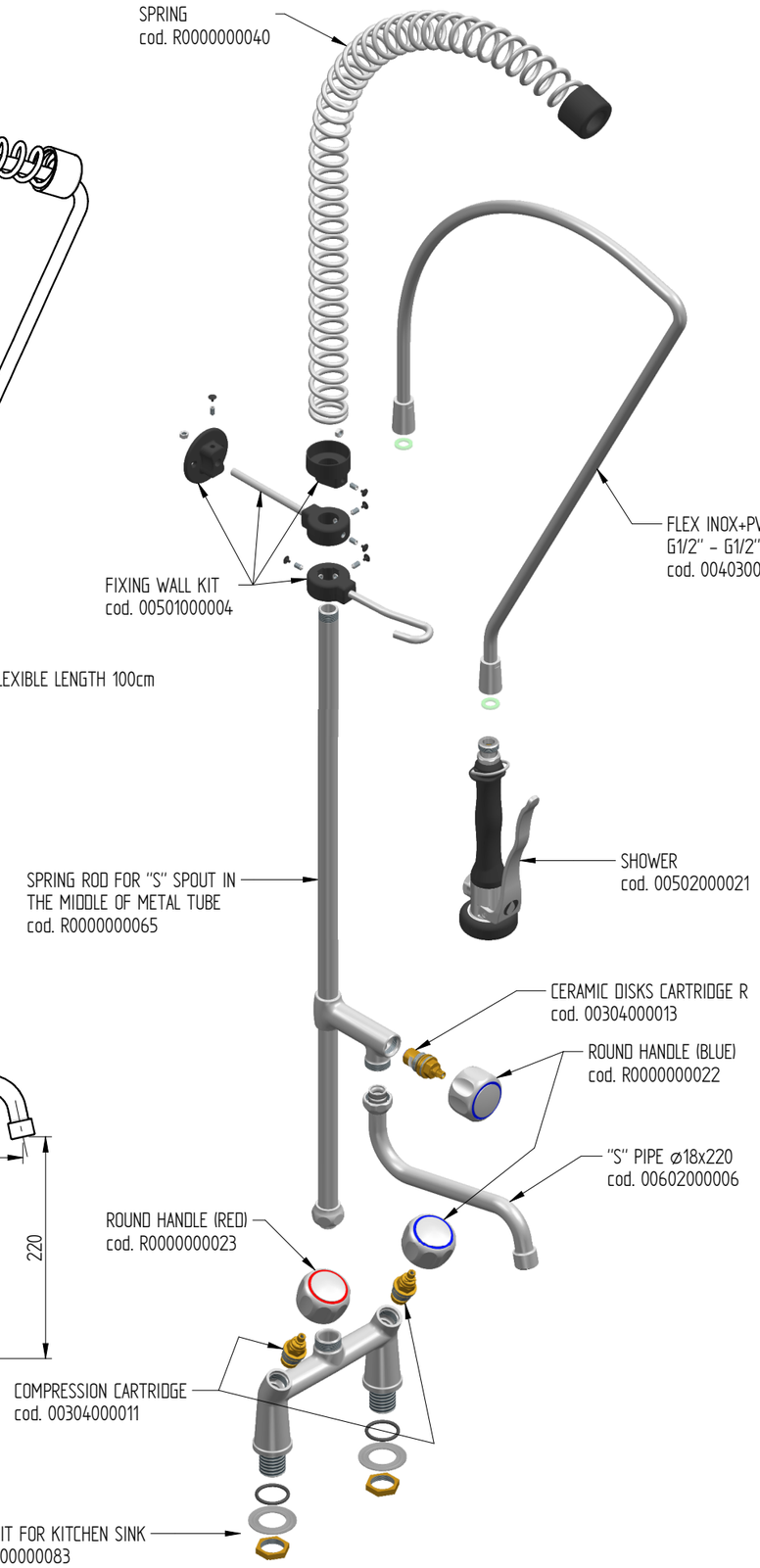

FLOW RATE : 12 L/min at 3,5 BAR only from the shower
14 L/min at 3,5 Bar onlly from the spout
18 L/min at 3,5 BAR when both + spout are open

sink fixing holes : ø27 mm

Rev. 00