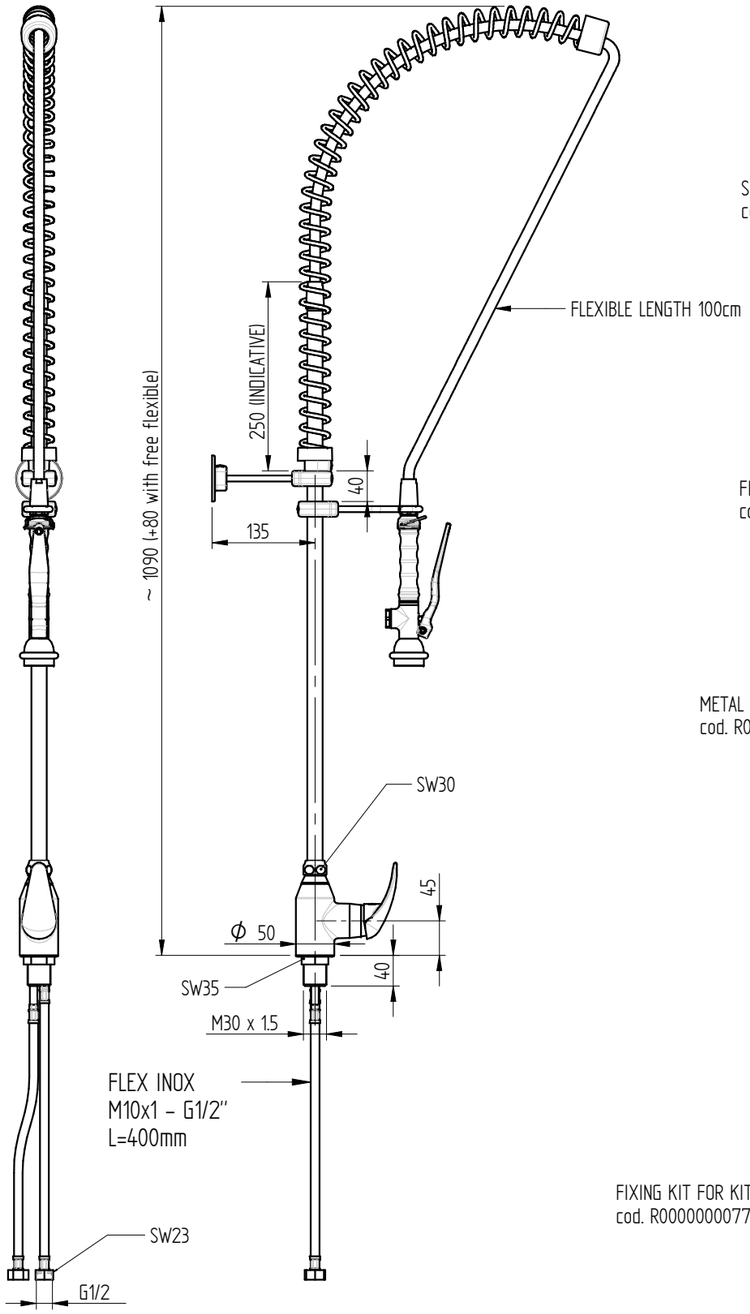

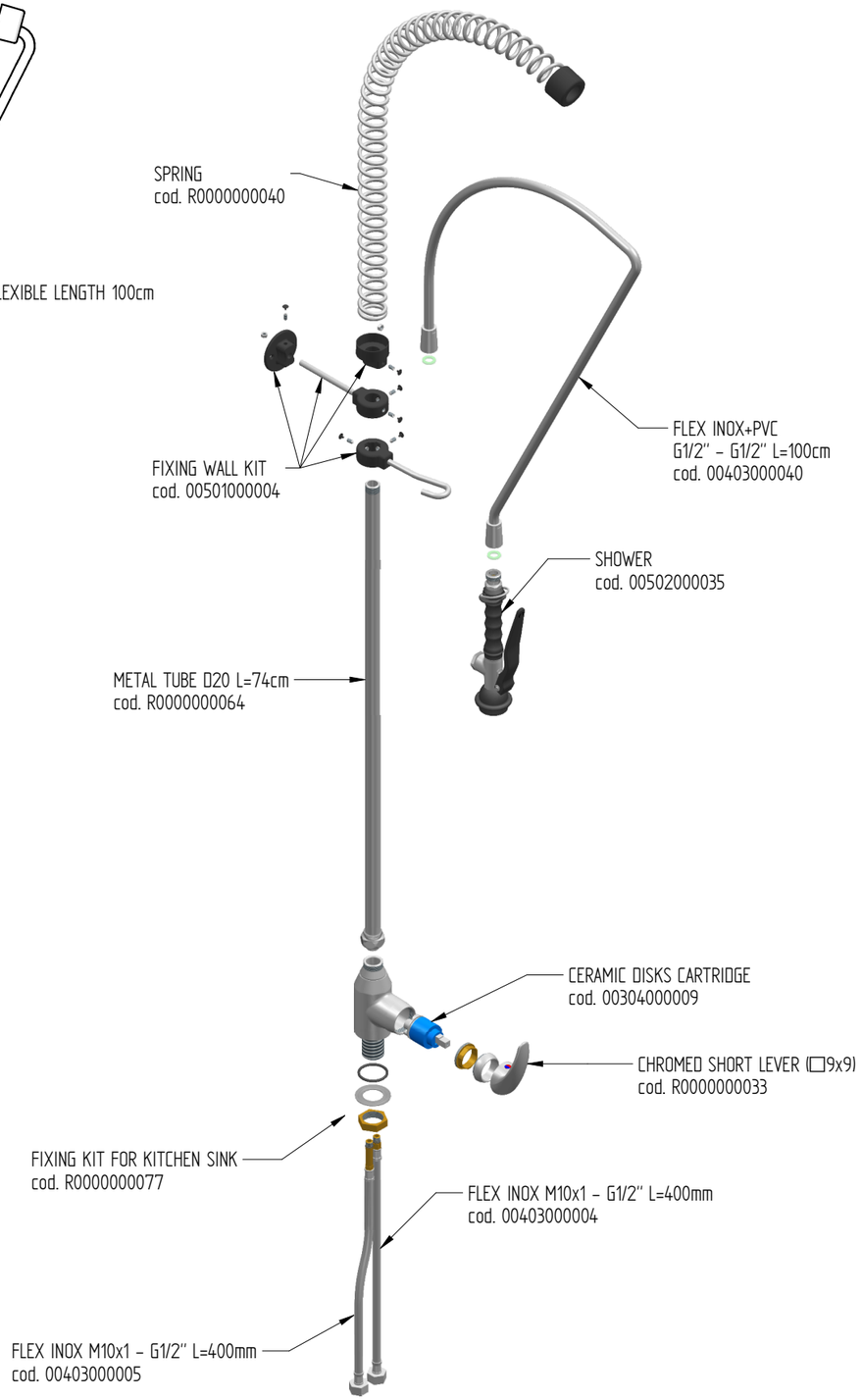

FLOW RATE : 12 L/min at 3,5 BAR only from the shower

sink fixing hole : ø31 mm

Rev. 01 - 25/02/2022