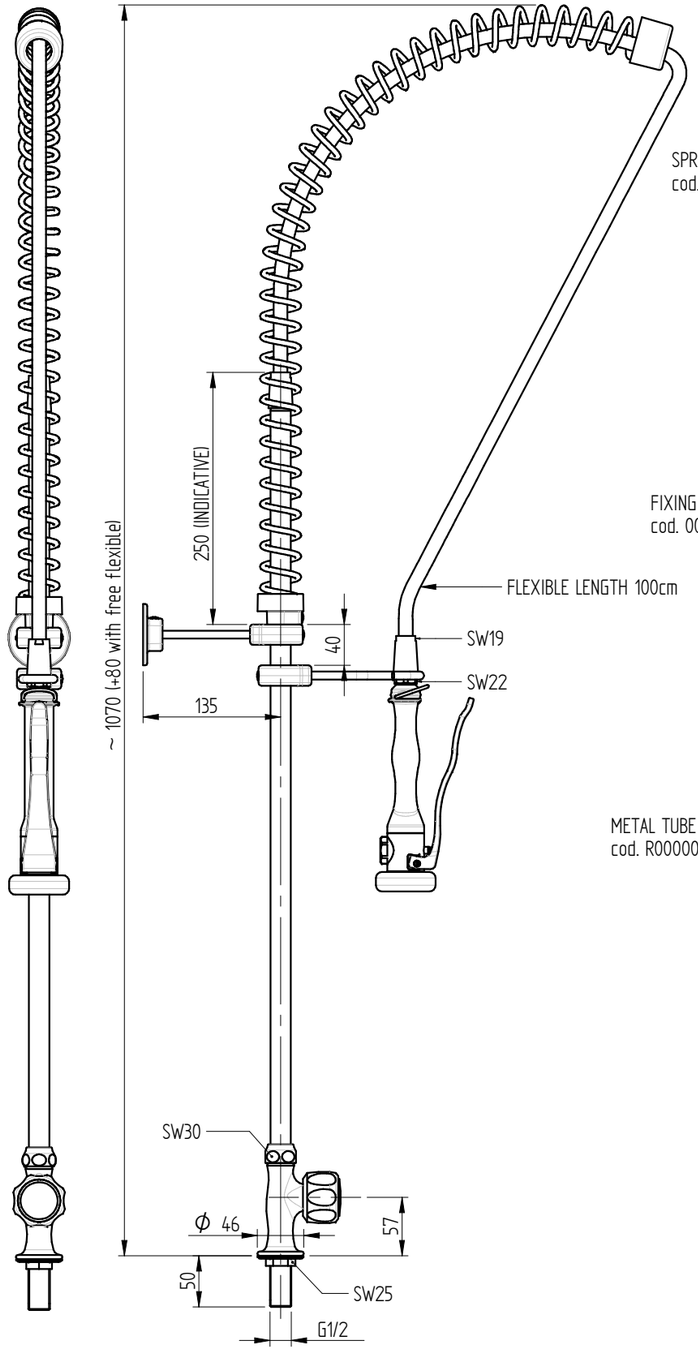

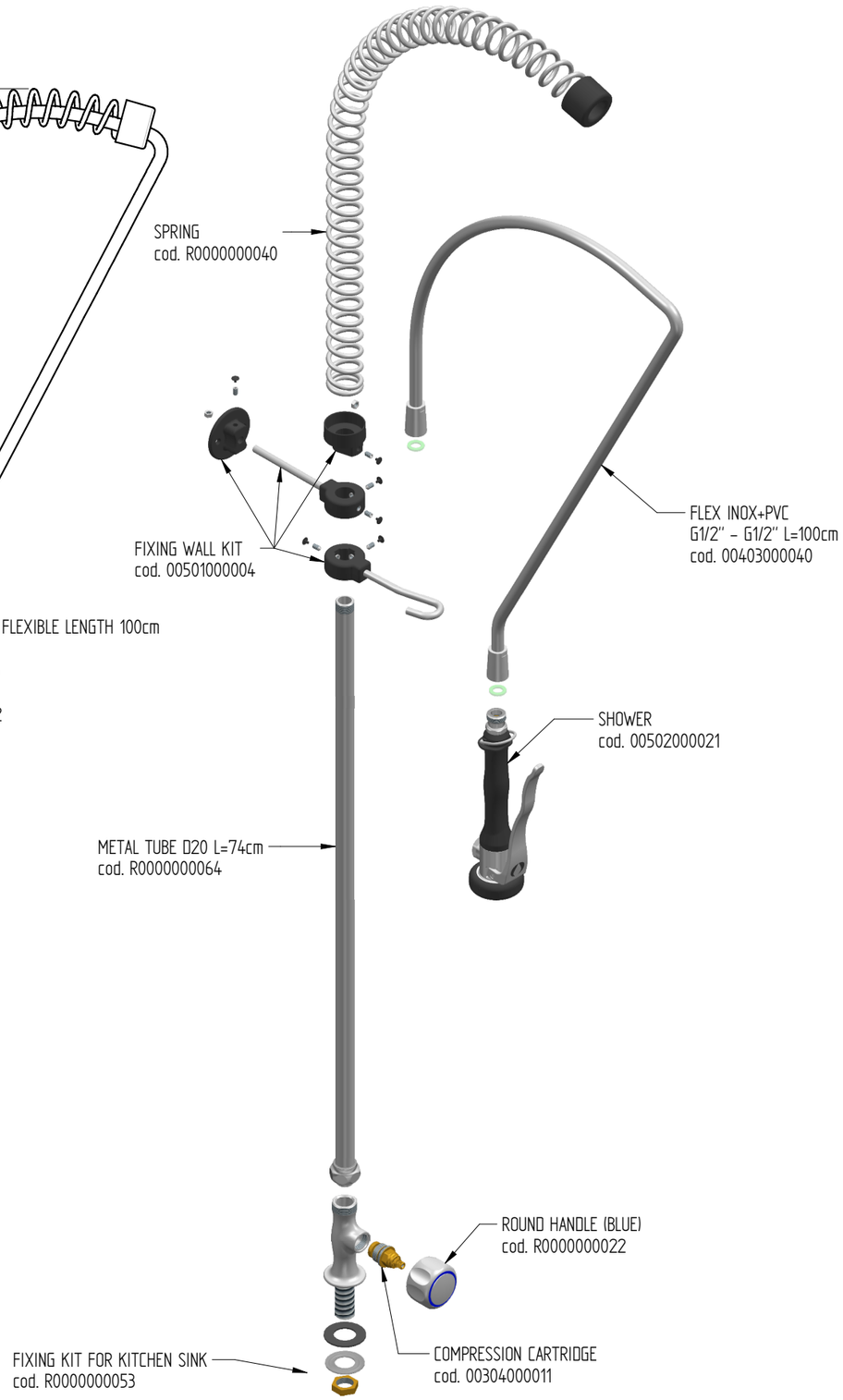

FLOW RATE : 12 L/min at 3,5 BAR only from the shower

sink fixing hole : ø25 mm

Rev. 00