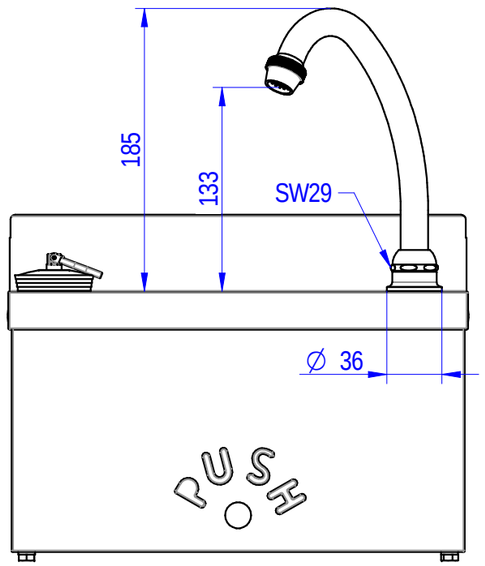

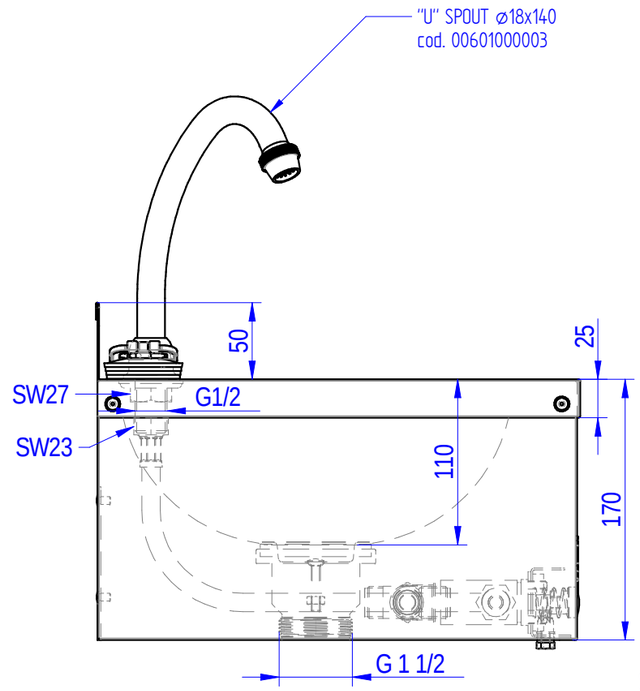

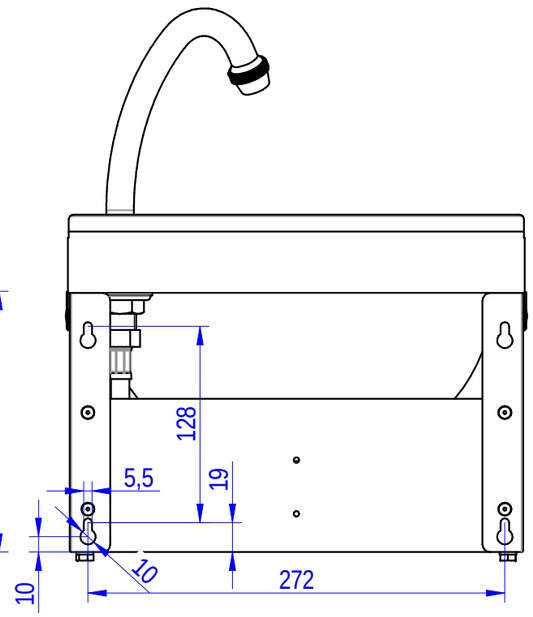

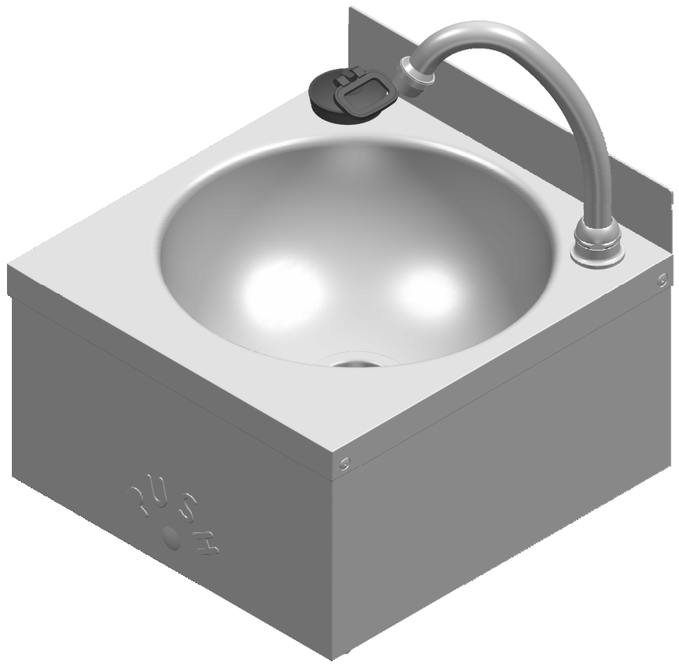

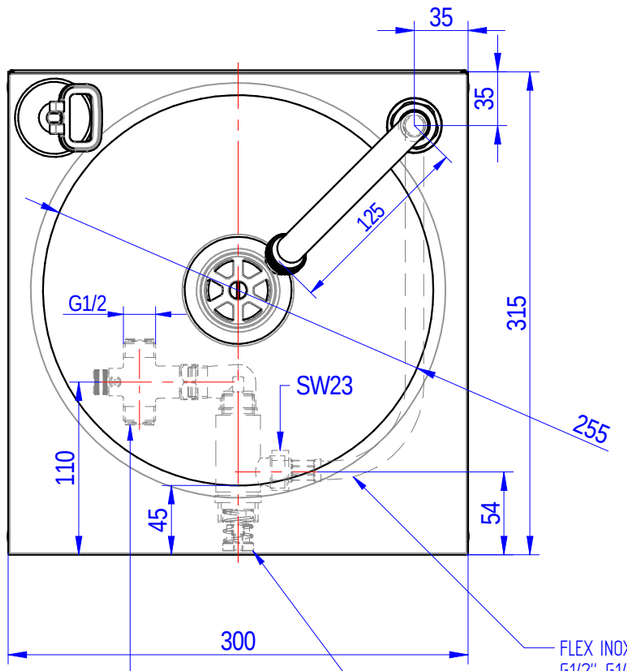

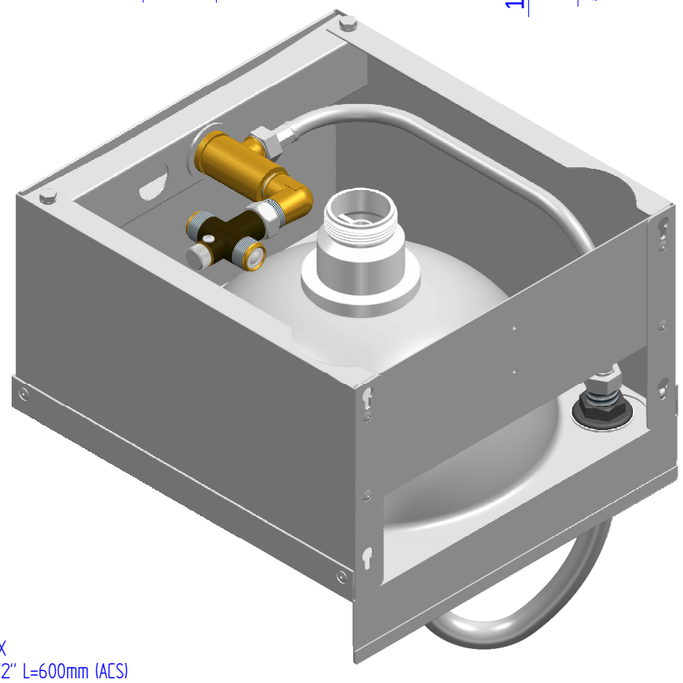

FLEX INOX
G1/2"-G1/2" L=600mm (ACS)
cod. 00403000097

PRE-MIXER WITH
NON-RETURN VALVES
cod. R0902010111

G1/2" SELF CLOSING TAP
cod. ARES018KIT1

FLOW TIME : 4÷6 sec NOT ADJUSTABLE
FLOW RATE : 11 L/min at 3,5 BAR

Rev. 00