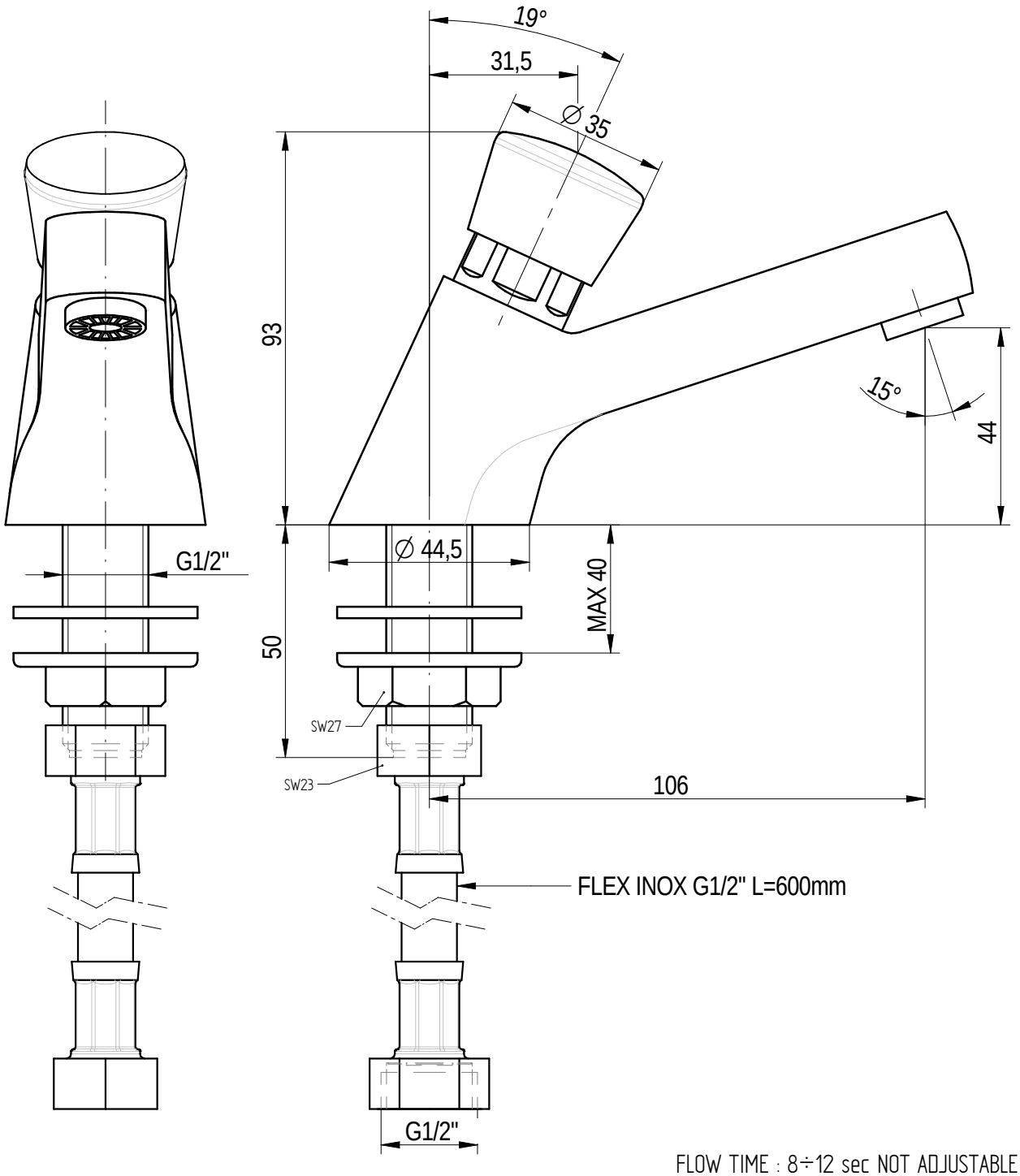

FLOW TIME : 8÷12 sec NOT ADJUSTABLE
FLOW RATE : 24 L/min at 3,5 BAR

Rev. 00